Printshop 10-20-75

# HARLEY-DAVIDSON POLICE BIKE

Revell

H-1227-380 A

© 1969 BY REVELL INC., VENICE, CALIF.

LITHO IN U.S.A.

The motorcycle plays an important part in enforcing the nation's traffic laws so that drivers and pedestrians can safely use the streets. Whether ploughing through heavy traffic, pursuing another vehicle or monitoring overtime parking, these two-wheel machines (a "motor" to an officer) have no equal.

The Harley-Davidson Motor Company produces a "Police Bike" especially for law enforcement agencies. It is different from motorcycles offered to the public. The only differences you may see between one police motor and another might be in radio equipment, lights, siren, etc. These are considered accessories and are specifications added by the government agency.

This 1:8th scale model is representative of those seen all over the country mounted by State Troopers, Rangers and Highway Patrol as well as local police.

## SPECIFICATIONS

| DIMENSIONS | ENGINE |
|---|---|
| Wheel Base – 60″ | 2 Cylinder |
| Overall Length – 92″ | 45° "V" Type |
| Overall Width 35″ | 60 HP @ 5,400 RPM |

## 1 ENGINE ASSEMBLY

A

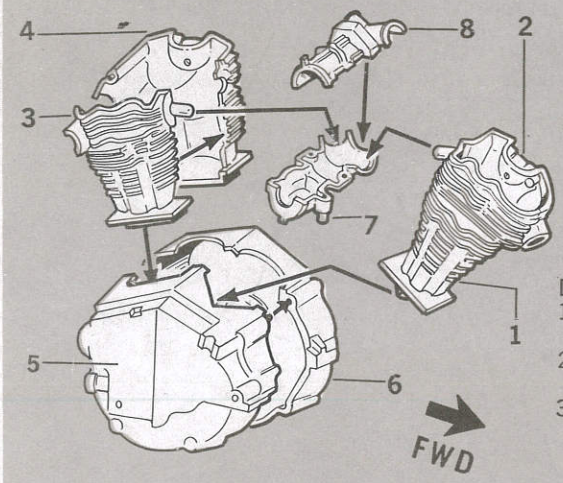


1 FRONT CYLINDER RIGHT
2 FRONT CYLINDER LEFT
3 REAR CYLINDER RIGHT
4 REAR CYLINDER LEFT
5 CRANKCASE RIGHT
6 CRANKCASE LEFT
7 CARBURETOR LOWER SECTION
8 CARBURETOR UPPER SECTION

DRAWING A
1. Cement FRONT CYLINDER RIGHT **Parts (1)** and LEFT **(2)** together. Cement REAR CYLINDER **Parts (3)** and **(4)** together.
2. Cement CRANKCASE HALVES **(5)** and **(6)** together.
3. Cement CYLINDERS to CRANKCASE.
4. Cement CARBURETOR LOWER HALF **(7)** to CYLINDERS then cement top section **(8)** to LOWER HALF.

B

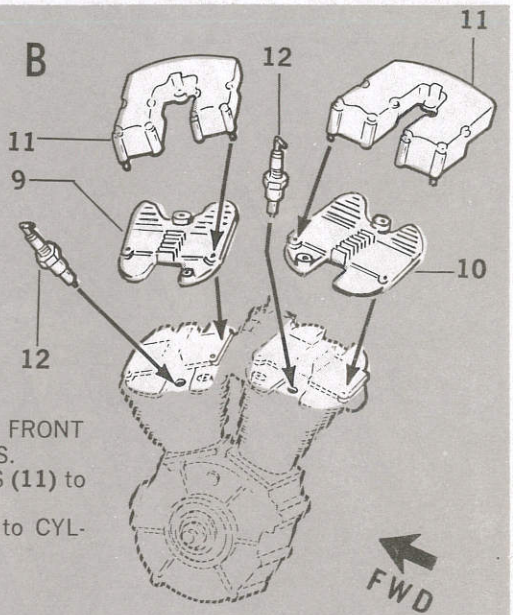


9 FRONT CYLINDER TOP
10 REAR CYLINDER TOP
11 ROCKER ARM COVERS (2 Pieces)
12 SPARK PLUGS (2 Pieces)

DRAWING B
1. Cement CYLINDER TOP Sections FRONT **(9)** and REAR **(10)** to CYLINDERS.
2. Cement two ROCKER ARM COVERS **(11)** to CYLINDERS.
3. Cement two SPARK PLUGS **(12)** to CYLINDERS.

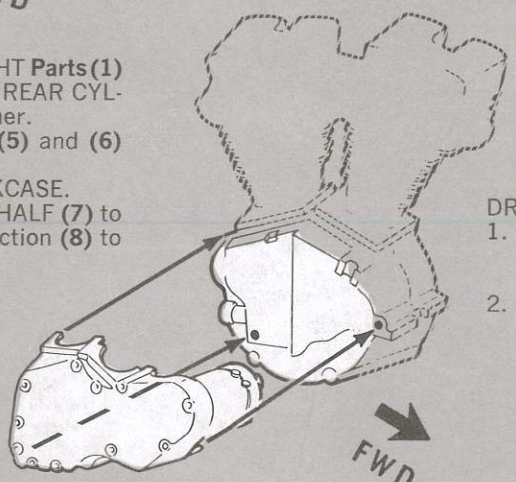


C

13 GENERATOR
14 GENERATOR CAP
15 OIL PUMP
16 TIMING GEAR CASE

DRAWING C
1. Cement GENERATOR **(13)** to CAP **(14)** and OIL PUMP **(15)** to TIMING GEAR CASE **(16)**.
2. Cement TIMING GEAR CASE to ENGINE CRANKCASE.

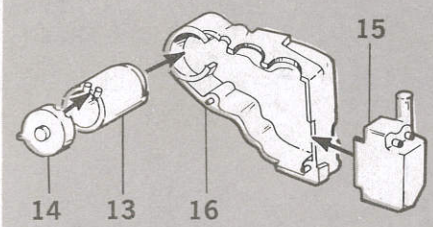


D

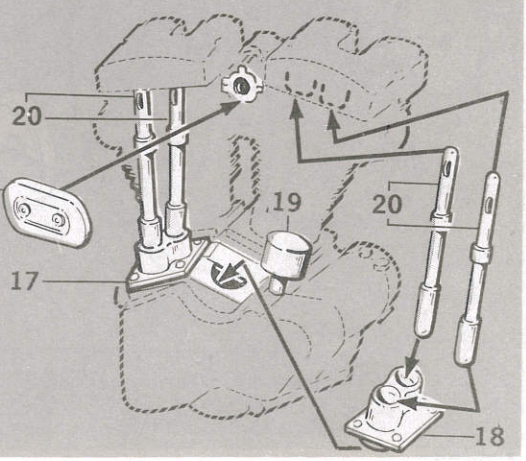


17 REAR VALVE TAPPET HOUSING
18 FRONT VALVE TAPPET HOUSING
19 CIRCUIT BREAKER
20 PUSH RODS (4 Pieces)
21 AIR CLEANER COVER CHROME

DRAWING D.
1. Cement REAR **(17)** and FRONT **(18)** TAPPET HOUSINGS to CRANKCASE.
2. Cement CIRCUIT BREAKER **(19)** to CRANKCASE.
3. Cement FOUR PUSHRODS **(20)** to ENGINE. Place top ends in ROCKER ARM COVERS and cement lower ends to TAPPET RECESSES.
4. Cement AIR CLEANER **(21)** to CARBURETOR.

# 2 FRONT FORKS AND WHEELS

TIRE MALE HALF (2 Parts)
TIRE FEMALE HALF (2 Parts)
25 RIGHT WHEEL HALF (2 Parts)
26 LEFT WHEEL HALF (2 Parts)

A

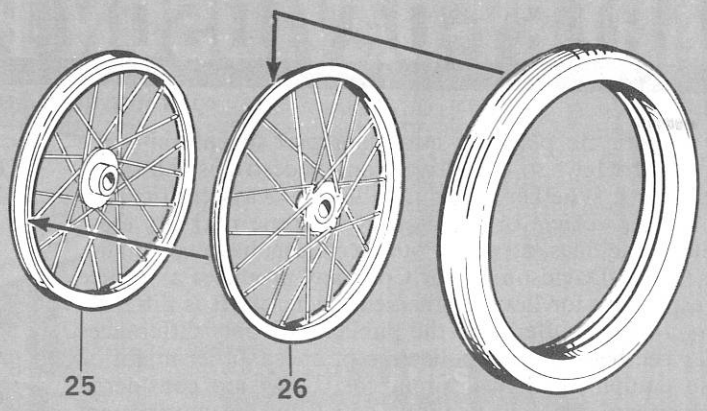


1. Cement a RIGHT **(25)** and LEFT **(26)** WHEEL HALVES together.
2. Install FRONT TIRE on FRONT WHEEL.
3. Repeat assembly for second WHEEL.

B

22 FORK LEG LEFT HALF INSIDE
23 FORK LEG LEFT HALF OUTSIDE
24 TRIPLE CLAMP BRACKET
27 FORK LEG RIGHT HALF OUTSIDE
28 FORK LEG RIGHT HALF INSIDE
29 TOP FORK CLAMP

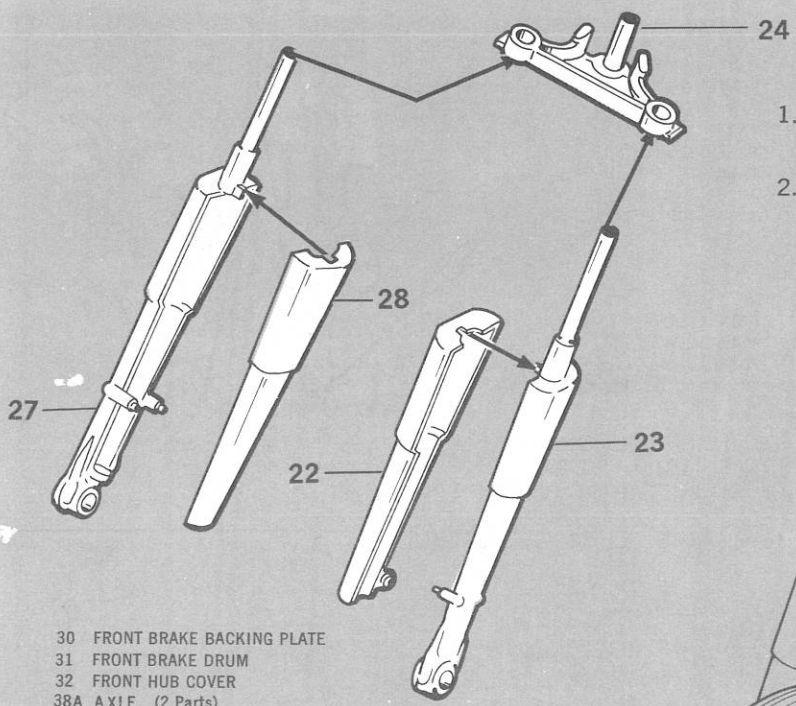


1. Cement LEFT FORK LEG INSIDE **(22)** to OUTSIDE **(23)**. Cement assembly to TRIPLE CLAMP **(24)**.
2. Cement RIGHT FORK LEG OUTSIDE **(27)** to INSIDE **(28)**. Cement to TRIPLE CLAMP **(24)**.

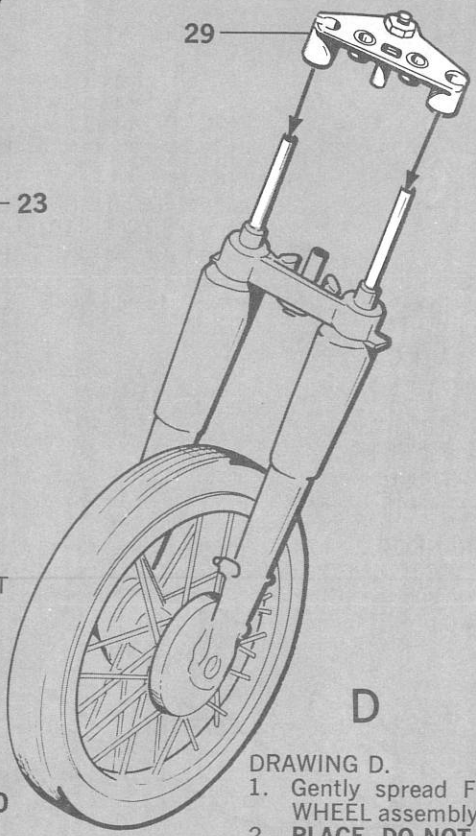


30 FRONT BRAKE BACKING PLATE
31 FRONT BRAKE DRUM
32 FRONT HUB COVER
38A AXLE (2 Parts)

1. Cement BRAKE DRUM **(31)** to WHEEL. Cement one AXLE **(38A)** to HUB COVER **(32)**.
2. Assemble but DO NOT CEMENT the FRONT BRAKE BACKING PLATE **(30)** and HUB COVER **(32)** to FRONT WHEEL.

C

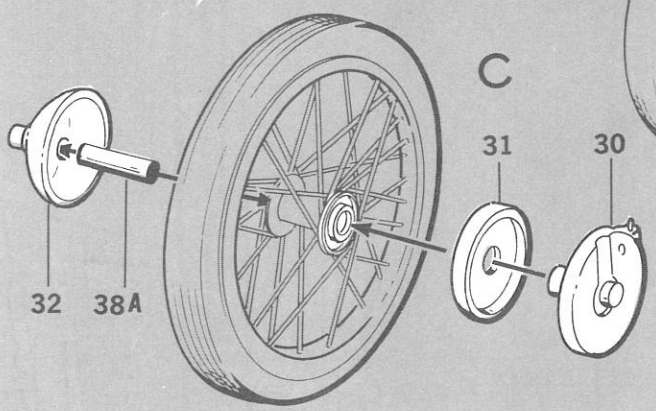


D

DRAWING D.
1. Gently spread FRONT FORK LEGS and install WHEEL assembly to FORKS.
2. **PLACE, DO NOT CEMENT** TOP TRIPLE CLAMP **(29)** on FORK LEGS. Carefully cement BACKING PLATE to LEFT FORK LEG.

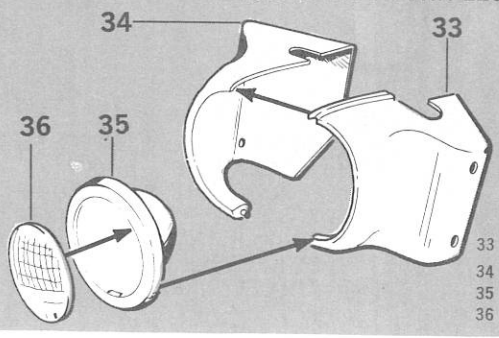


E

DRAWING E.
1. Cement LIGHT HOUSING LEFT **(33)** and RIGHT **(34)** together. Cement HEADLIGHT **(35)** and LIGHT LENS **(36)** to HOUSING.

33 HEADLIGHT HOUSING LEFT HALF
34 HEADLIGHT HOUSING RIGHT HALF
35 HEADLIGHT
36 HEADLIGHT LENS

## 3 REAR WHEEL ASSEMBLY

37 LEFT SWING ARM COLOR
38 BRAKE BACKING PLATE
38A AXLE
39 HYDRAULIC LINE UNION
40 ALIGNMENT PIN
41 SPROCKET AND CHAIN
42 RIGHT SWING ARM

1. Cement LEFT SWING ARM **(37)** and the remaining AXLE **(38A)** to the BRAKE BACKING PLATE **(38).** Cement HYDRAULIC LINE UNION **(39)** to BACKING PLATE and ALIGNMENT PIN **(40)** to SWING ARM.
2. SLIDE SPROCKET AND CHAIN **(41),** and REAR WHEEL ASSEMBLY from Step 2 on AXLE.
3. Cement RIGHT SWING ARM **(42)** to AXLE and ALIGNMENT PIN.

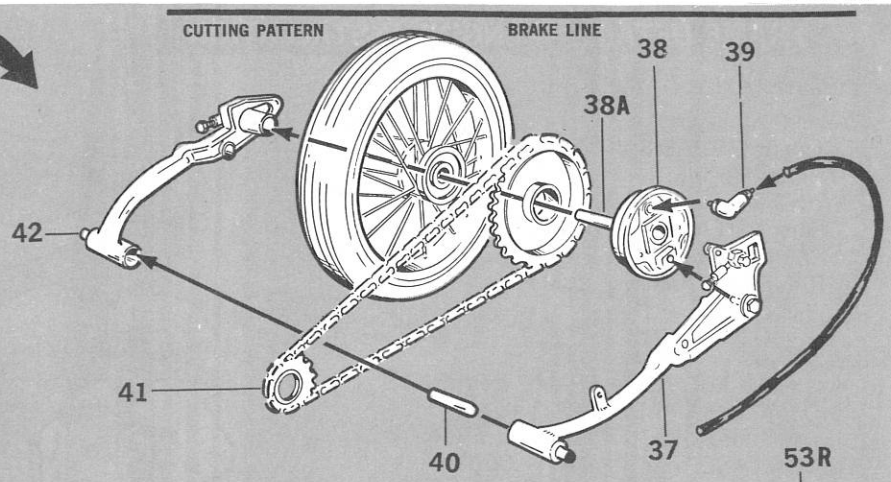


## 4 FRAME ASSEMBLY

43 KICK STAND LEVER
44 SHIFT MOUNT BRACKET
45 RETAINER
46 BRACKET SHIELD
47 SHIFT LEVER

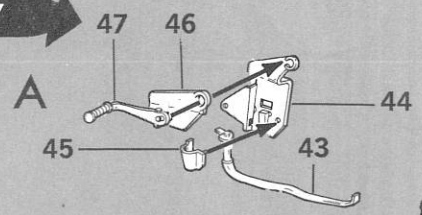


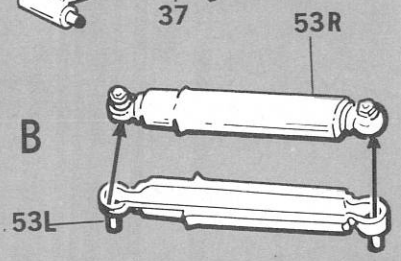


DRAWING A
1. Trap KICK STAND LEVER **(43)** to MOUNTING BRACKET **(44)** by RETAINER **(45).** Cement RETAINER to BRACKET **(DO NOT ALLOW CEMENT TO TOUCH LEVER).**
2. Cement SHIELD **(46)** and SHIFT LEVER **(47)** to BRACKET.

DRAWING B
1. Make two REAR SHOCK ABSORBERS by cementing the INSIDE HALF **(53 L)** to OUTSIDE **(53 R).**

DRAWING C
1. Cement RIGHT **(49)** and LEFT **(50)** FRAME sections together trapping SEAT BRACKET **(48)** between them.
2. Cement ENGINE MOUNT **(51)** and SEAT BRACKET **(52)** to FRAME.
3. Cement Assembly from drawing A to LEFT FRAME TUBE.

DRAWING D
1. Spread REAR of FRAME and install REAR SWING ARM and WHEEL. Cement CROSS TUBES.
2. Cement FENDER SUPPORTS **(54 L)** and **(54 R)** to FRAME.
3. Press BRAKE LINE to PIN on FRAME. Cement CHAIN GUARD **(55)** to SWING ARM.
4. Cement SHOCK ABSORBERS to FRAME and SWING ARM.

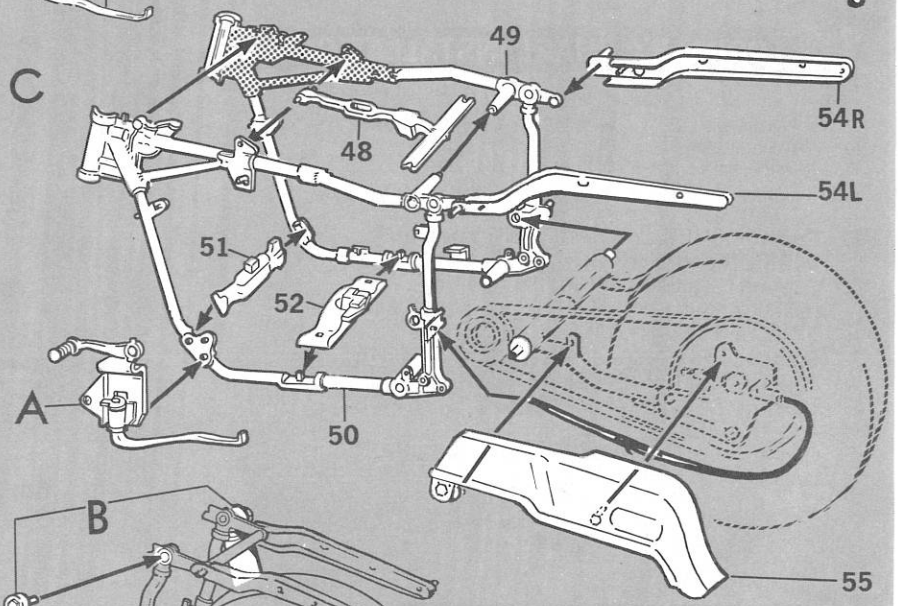


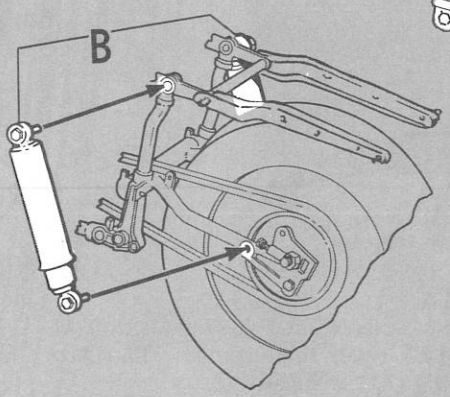


48 SEAT MOUNTING BRACKET
49 RIGHT FRAME
50 LEFT FRAME
51 FRONT ENGINE MOUNT
52 SEAT TUBE BRACKET
53R REAR SHOCK OUTSIDE (2 Parts)
53L REAR SHOCK INSIDE (2 Parts)
54R REAR FENDER SUPPORT RIGHT HALF
54L REAR FENDER SUPPORT LEFT HALF
55 CHAIN GUARD

## 5 TRANSMISSION

56 TRANSMISSION CASE UPPER
57 TRANSMISSION CASE LOWER
58 TRANSMISSION LEFT COVER PLATE
59 TRANSMISSION MOUNT PLATE

DRAWING A
1. Cement TRANSMISSION UPPER **(56)** and LOWER **(57)** CASE together. Cement LEFT COVER PLATE **(58)** to TRANSMISSION.

DRAWING B
1. Cement TRANSMISSION MOUNTING PLATE **(59)** to FRAME.
2. SLIDE TRANSMISSION SHAFT through CHAIN SPROCKET and cement TRANSMISSION to MOUNTING PLATE.

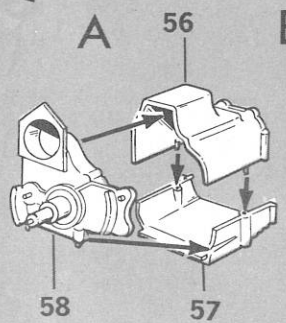


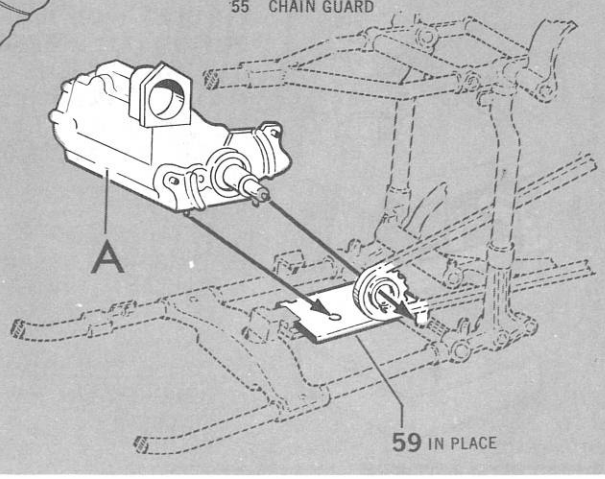

## 6 FRAME DETAILS — ENGINE INSTALLATION

60 ENGINE SKID PLATE 61 SEAT SUPPORT TUBE 62 TUBE BRACKET

DRAWING A

1. Cement ENGINE SKID PLATE **(60)** to BOTTOM of FRAME.

DRAWING B

1. Cement SEAT SUPPORT TUBE **(61)** to FRAME. Cement TUBE BRACKET **(62)** to FRAME and TUBE.

DRAWING C

1. Assemble ENGINE to FRAME from RIGHT SIDE. Place CRANKCASE between lower frame tubes. ALIGN NOTCH in FRONT of CRANKCASE with square LOCATOR on front FRAME CROSS MEMBER. Gently press top of engine toward Frame and Engine will pop in place. **(DO NOT CEMENT TO FRAME AT THIS TIME.)**

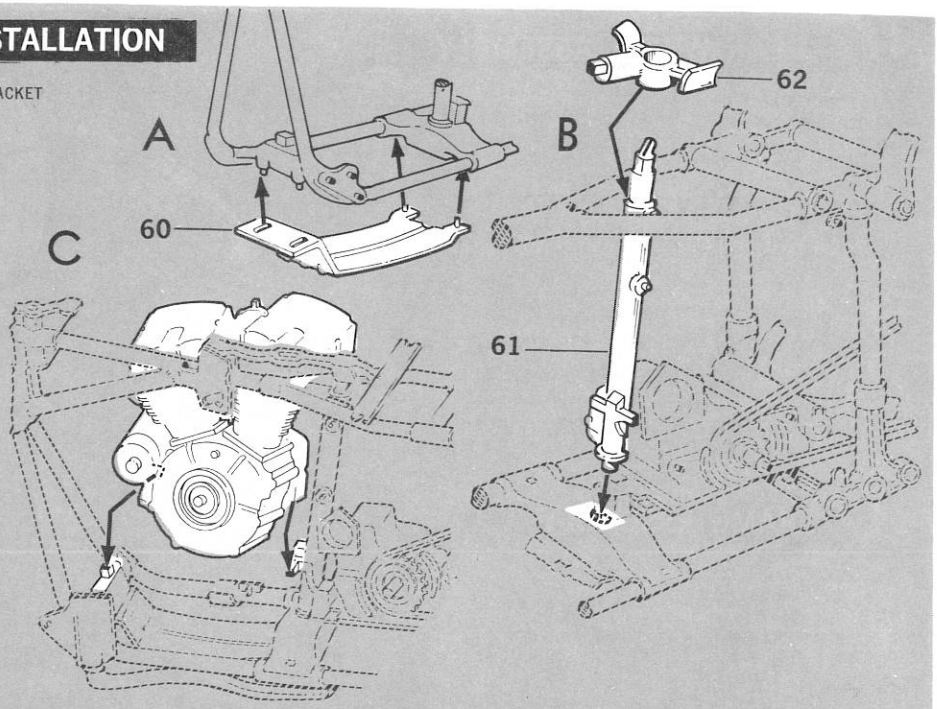


## 7 PRIMARY CHAIN INSTALLATION

63 SHIFT LINKAGE
64 STARTER SOLENOID
65 PRIMARY CHAIN CASE
66 PRIMARY CHAIN AND CLUTCH
67 ENGINE UPPER MOUNT
68 PRIMARY CASE OUTER COVER

1. Cement SHIFT LINKAGE **(63)** to TRANSMISSION and SHIFT BRACKET.
2. Cement SOLENOID **(64)** to CHAIN CASE **(65).** Cement CHAIN CASE to TRANSMISSION and CRANKCASE.
3. Cement PRIMARY CHAIN **(66)** to ENGINE and TRANSMISSION SHAFTS.
4. Cement ENGINE MOUNT **(67)** to HEADS and FRAME.
5. Cement OUTER COVER **(68)** to CHAIN CASE.

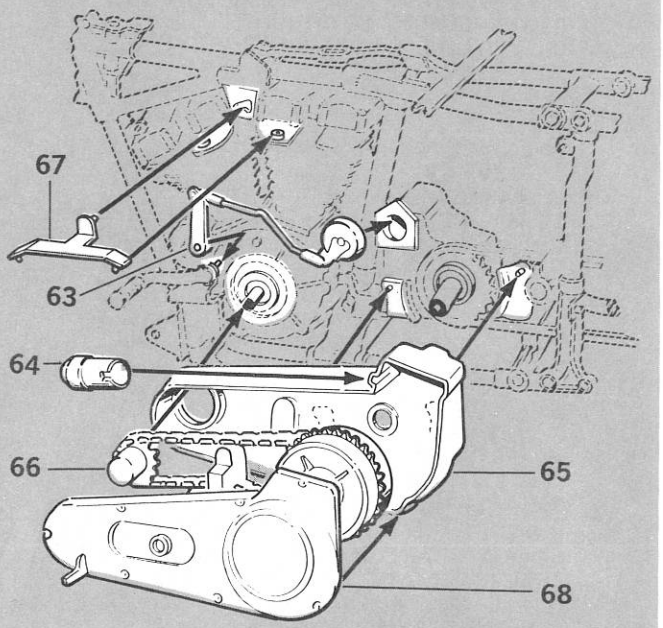


## 8 OIL TANK ASSEMBLY

69 OIL TANK TOP
70 OIL TANK MOUNTING BRACKET
71 OIL TANK BOTTOM
72 OIL TANK CAP
73 COIL BOX
74 COIL BOX RETAINER

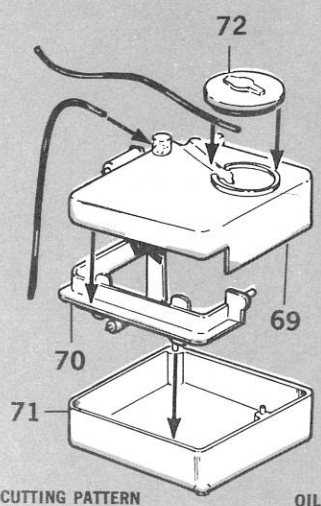


CUTTING PATTERN

DRAWING A

1. Cement OIL TANK TOP **(69)** to MOUNTING BRACKET **(70),** then cement OIL TANK BOTTOM **(71)** to BRACKET.
2. Cut TWO LENGTHS of TUBING, cement one in the HOLE in BOSS on TOP of TANK. Lay the other in RECESS and TRAP IN PLACE by cementing OIL TANK CAP **(72)** to TANK.

DRAWING B

1. CUT the LENGTH of TUBING for SPARK PLUGS and trap in COIL BOX **(73)** by cementing RETAINER **(74)** to COIL BOX. Lower end of tubing should be shorter as shown.
2. Cement COIL BOX to BOSSES on OIL TANK BRACKET and then cement OIL TANK to FRAME.

OIL LINE

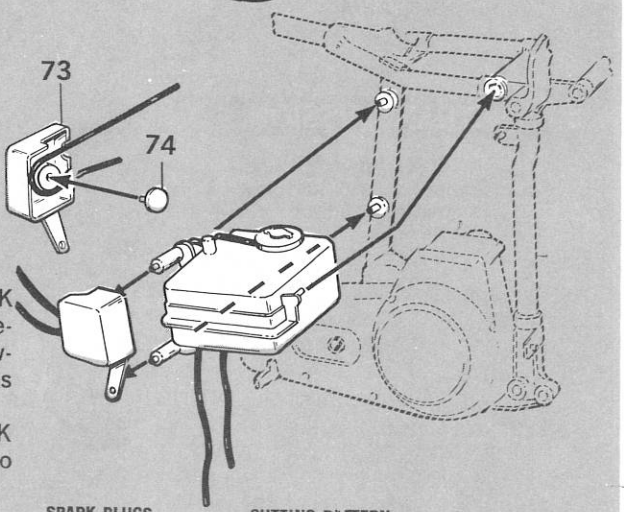


SPARK PLUGS

CUTTING PATTERN

## 9 FRONT CYLINDER EXHAUST

75 TRANSITION PIPE TOP
76 TRANSITION PIPE BOTTOM
77 FRONT CYLINDER HEADER RIGHT
78 FRONT CYLINDER HEADER LEFT

1. Cement TOP **(75)** and BOTTOM **(76)** TRANSITION PIPES together and RIGHT **(77)** and LEFT **(78)** FRONT CYLINDER HEADER PIPES together.
2. SLIDE TRANSITION PIPE over FRAME TUBE and beside CRANKCASE and cement to FRAME. BEFORE CEMENT SETS install HEADER TUBE to CYLINDER HEAD and TRANSITION TUBE to assure proper ALIGNMENT.

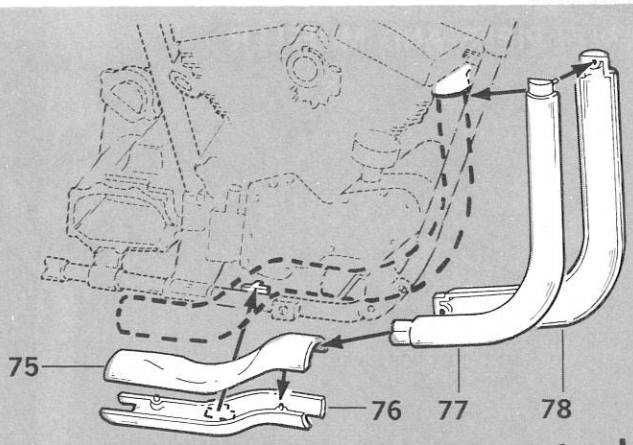


## 10 LINES AND CABLE

1. Press OIL LINES onto LOCATORS on OIL PUMP HOUSING.
2. Cement STARTER MOTOR **(79)** to GEAR REDUCTION CASE **(80)**, cement this assembly to the BACK of PRIMARY CHAIN CASE.
3. Cement TRANSMISSION RIGHT COVER **(81)** to the TRANSMISSION. Be sure locating PIN on END of STARTER locates in BOSS of BRACKET on COVER.
4. Cut TUBING for CLUTCH CABLE and install on CLUTCH LEVER **(82)** locator.
5. FEED TUBING through bike from RIGHT SIDE in FRONT of STARTER MOTOR and turn FORWARD so it is positioned BEHIND SHIFT LINKAGE on LEFT side of ENGINE.

79 STARTER MOTOR
80 GEAR REDUCTION CASE
81 TRANSMISSION COVER RIGHT
82 CLUTCH LEVER

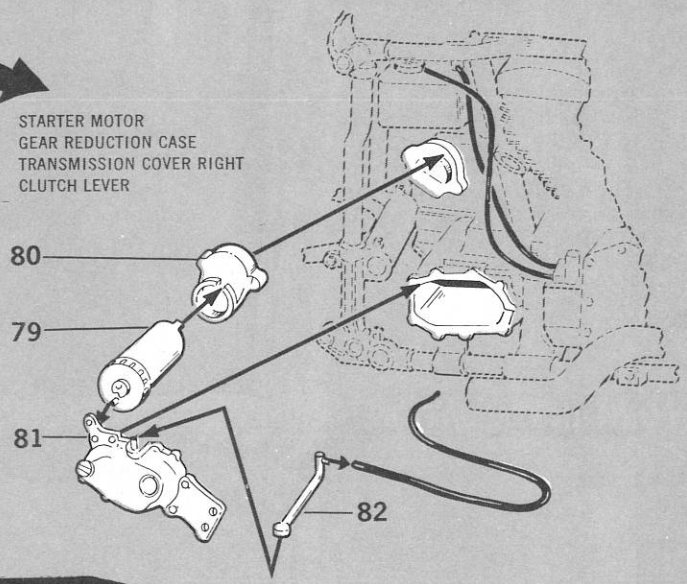


CLUTCH CABLE CUTTING PATTERN

## 11 TANK AND FENDER INSTALLATION

1. Cement FUEL TANK RIGHT **(83)** and LEFT **(84)** to FRAME.
2. Cement SPEEDOMETER LENS **(86)** to INSTRUMENT PANEL **(85)** install Decal under LENS. Cement PANEL to top of FUEL TANKS.
3. Cement a GAS CAP **(87)** on each side of panel.
4. Cement REAR FENDER FRONT **(88)** to REAR Section **(89)** Slide FENDER between SUPPORTS and cement.
5. Cement SEAT **(90)** to SEAT FRAME **(91)**, cement SEAT to SEAT BRACKET.
6. Cut FUEL LINE tubing. Attach to TANK VALVE lead other end between CYLINDERS to CARBURETOR.

83 FUEL TANK RIGHT
84 FUEL TANK LEFT
85 INSTRUMENT PANEL
86 SPEEDOMETER LENS
87 GAS CAP (2 Parts)
88 REAR FENDER FRONT SECTION
89 REAR FENDER REAR SECTION
90 SEAT
91 SEAT FRAME

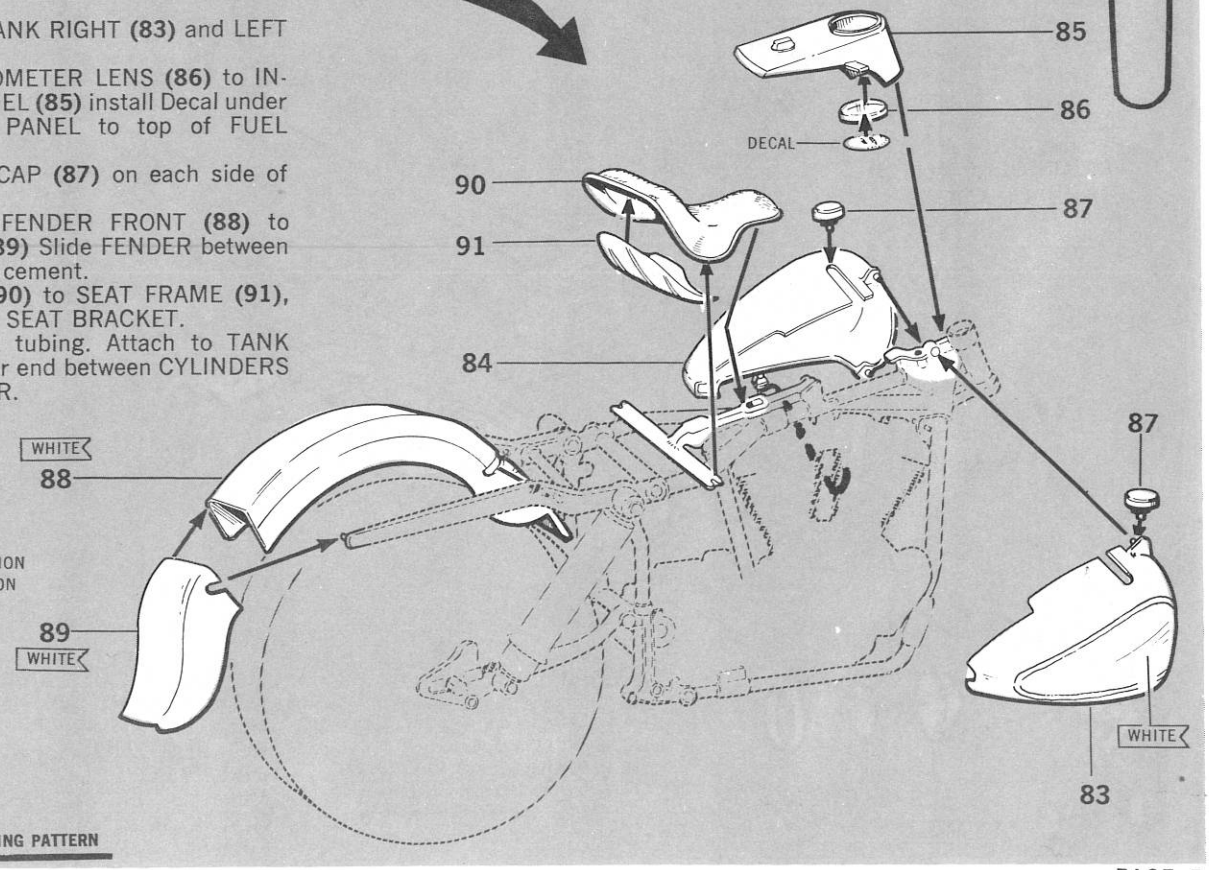


FUEL LINE CUTTING PATTERN

## 12 PIPES AND MUFFLER

92 REAR CYLINDER HEADER RIGHT
93 REAR CYLINDER HEADER LEFT
94 HEADER PIPE PLUG
95 MUFFLER TOP
96 MUFFLER BOTTOM
97 COLLECTOR PIPE INSIDE
98 COLLECTOR PIPE OUTSIDE
99 ANTENNA BRACKET

1. Cement sections of REAR CYLINDER HEADER PIPE **(92)**, **(93)** and PLUG **(94)** together.
2. Cement MUFFLER TOP **(95)** to BOTTOM **(96)**. Cement COLLECTOR PIPE HALVES **(97)** and **(98)** together.
3. Cement MUFFLER TO FRAME. Locate Rear HEADER PIPE to COLLECTOR PIPE. Position COLLECTOR TO MUFFLER and TRANSITION PIPE, rotate HEADER until parts line up properly and cement.
4. Install ANTENNA BRACKET **(99)** to FENDER SUPPORTS.

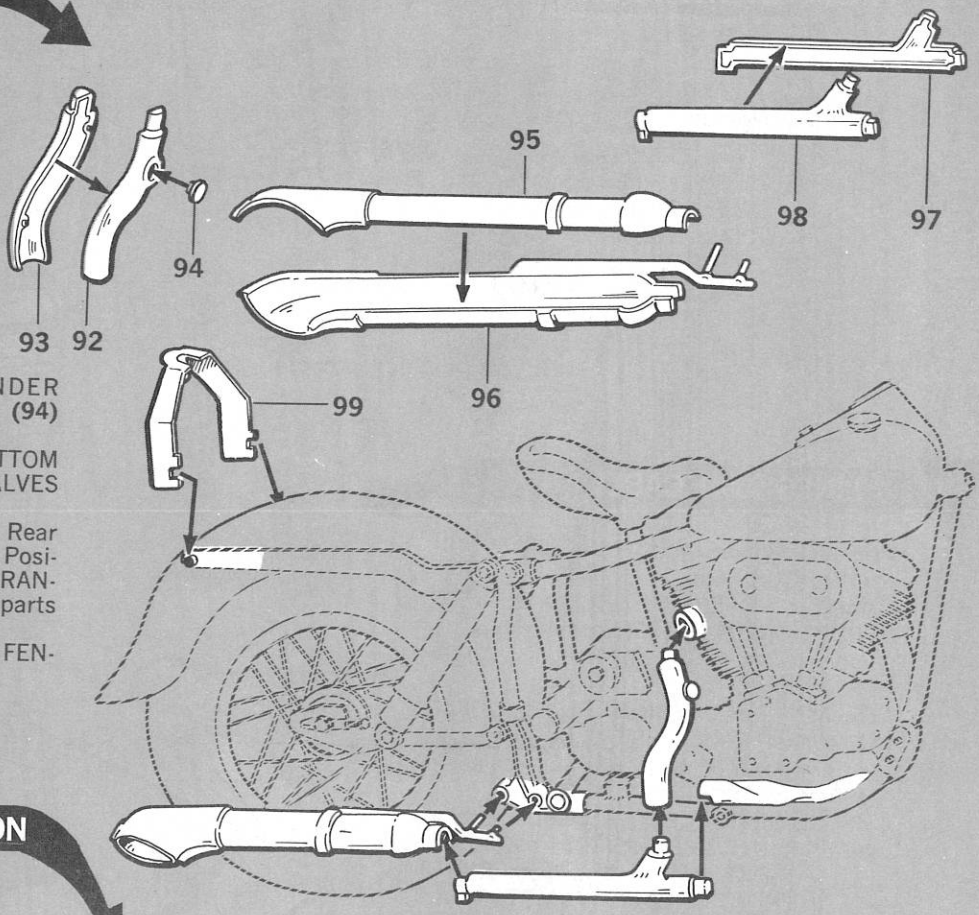


## 13 FRONT FORK INSTALLATION

100 BATTERY COVER
101 BRAKE MOUNTING BRACKET
102 BRAKE ASSEMBLY
103 RIGHT FOOT REST
104 RIGHT FOOT PEG

1. Cement BATTERY COVER **(100)** to FRAME and OIL TANK.
2. Cement MOUNTING BRACKET **(101)** to FRAME. Cement BRAKE Assembly **(102)** to BRACKET. Cement FOOT REST **(103)** to Assembly. Cement FOOT PEG **(104)** to COVER PLATE.
3. Remove TOP TRIPLE CLAMP **(29)** install FRONT FORKS from STEP 2, replace TOP CLAMP and cement to FORK LEGS only.

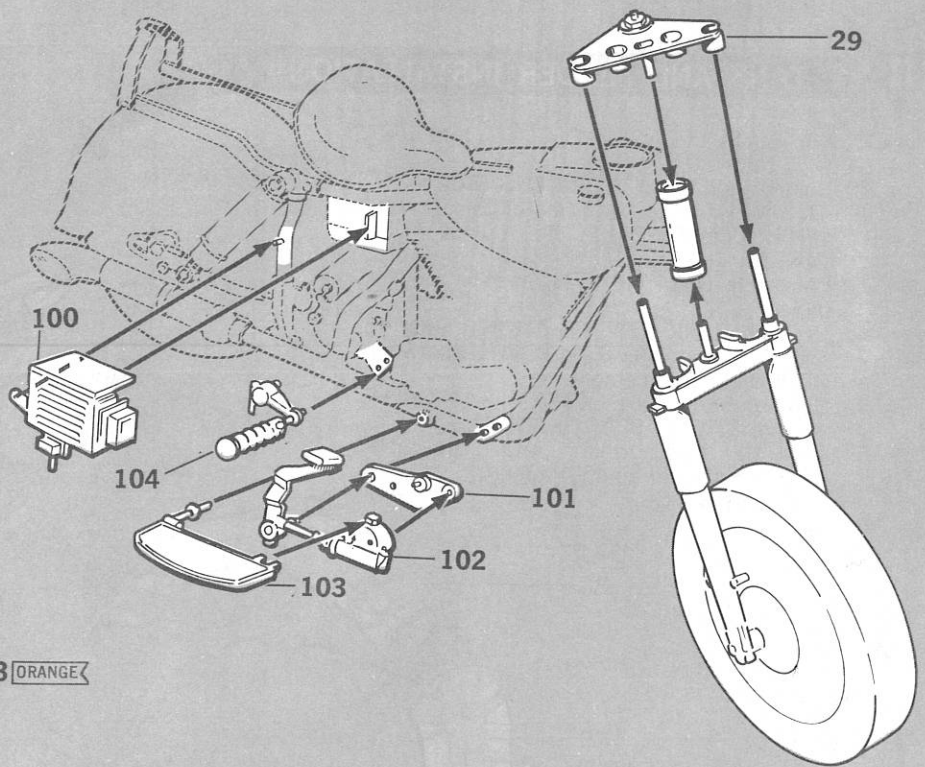


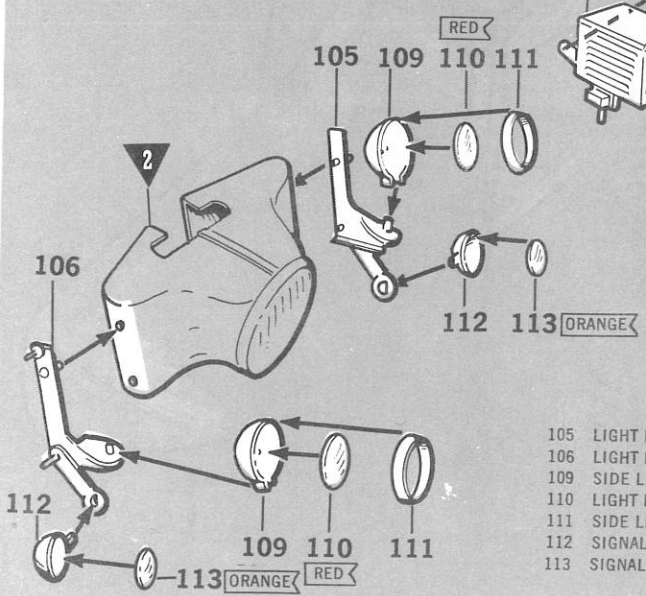


105 LIGHT BRACKET LEFT HALF
106 LIGHT BRACKET RIGHT HALF
109 SIDE LIGHT HOUSING (2 Parts)
110 LIGHT LENS (2 Parts)
111 SIDE LIGHT RING (2 Parts)
112 SIGNAL LIGHT HOUSING (2 Parts)
113 SIGNAL LIGHT LENS (4 Parts)

1. Cement the LIGHT BRACKETS **(105)** and **(106)** to LIGHT HOUSING, STEP 2.
2. Make two side LIGHTS by cementing a HOUSING **(109)** to a LENS **(110)** and RING **(111)**.
3. Make two SIGNAL LAMPS by cementing HOUSINGS **(112)** to LENSES **(113)**.
4. Cement LAMPS to BRACKET as shown.

## 14 FRONT END ASSEMBLY

114 FRONT CRASH BAR
115 LEFT FOOT REST
116 LEFT FOOT PEG
117 FRONT FENDER TRIM
118 FRONT FENDER
119 SPEAKER BRACKET
120 HANDLE BARS
121 SPEAKER BOX FACE
122 SPEAKER BOX

1. Cement CRASH BAR **(114)** to FRAME. Cement FOOT REST **(115)** and FOOT PEG **(116)** to CASE.
2. Cement FENDER TRIM **(117)** to FENDER **(118).** Slide FENDER around TIRE, between FORK LEGS and cement.
3. Slide LIGHT HOUSING down over FORKS and cement to TOP TRIPLE CLAMP.
3. Cement SPEAKER BOX BRACKET **(119)** to HANDLE BARS **(120).** Cement BARS to TOP CLAMP.
4. Cut BRAKE LINE, attach to BACKING PLATE. Press end on right HAND GRIP after BARS installed. CLUTCH CABLE attaches to LEFT HAND GRIP.
5. Cement SPEAKER BOX FACE **(121)** to BOX **(122)** then cement BOX to BRACKET.
6. THROTTLE CABLE cements to the pin on bottom side of the RIGHT HANDLEBAR GRIP.

THROTTLE (1 REQ.)

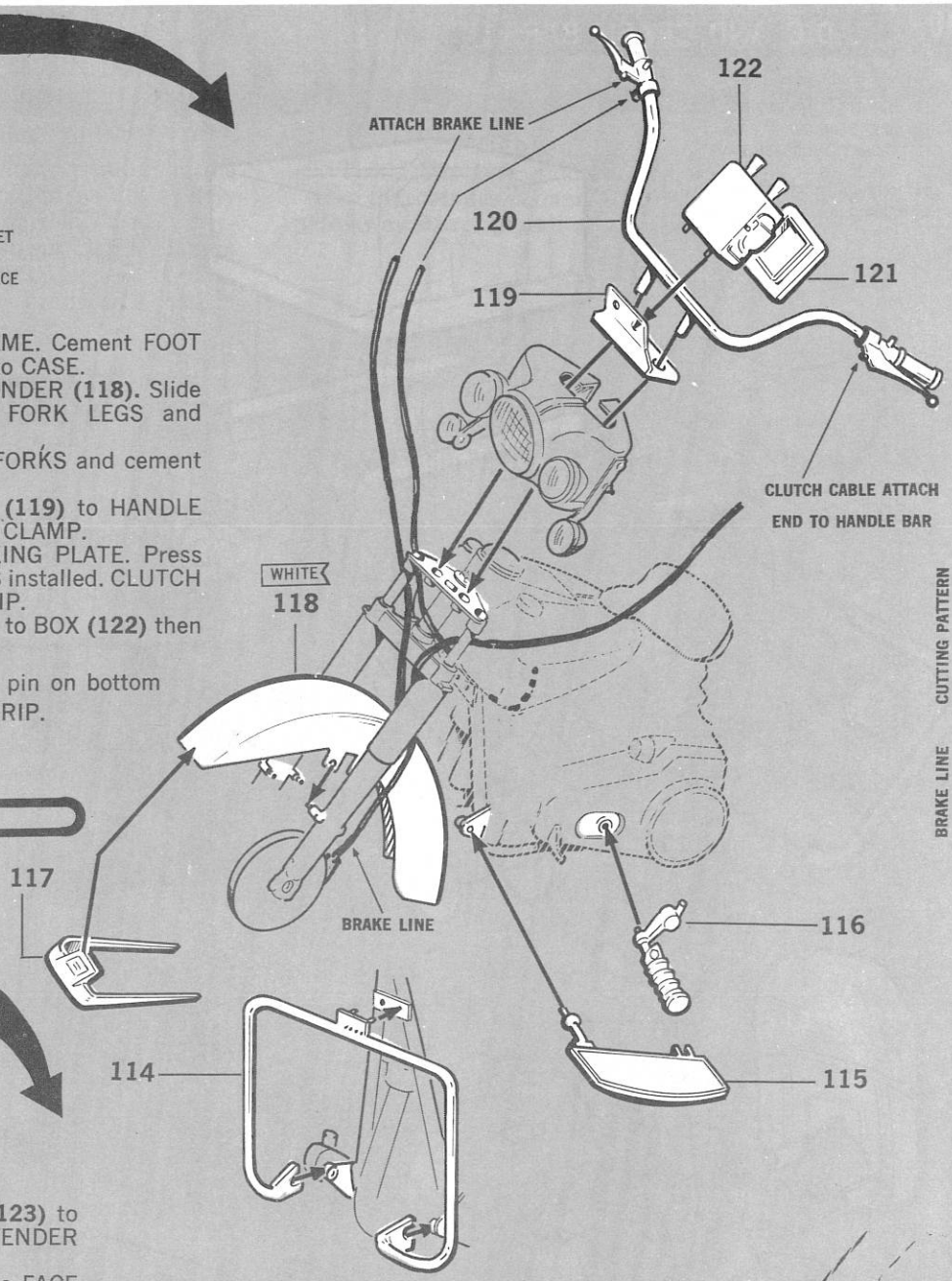


## 15 EQUIPMENT BOXES

123 EQUIPMENT BOX BACK LEFT HALF
124 EQUIPMENT BOX FACE LEFT HALF
125 EQUIPMENT BOX BACK RIGHT HALF
126 EQUIPMENT BOX FACE RIGHT HALF
127 REAR FENDER TRIM
128 REAR BUMPER

1. Cement EQUIPMENT BOX BACK **(123)** to FACE **(124)** cement to LEFT FENDER BRACE.
2. Cement RIGHT BOX BACK **(125)** to FACE **(126)** and to FENDER BRACE.
3. Cement FENDER TRIM **(127)** to FENDER. Cement REAR CRASH BAR **(128)** to BOXES.

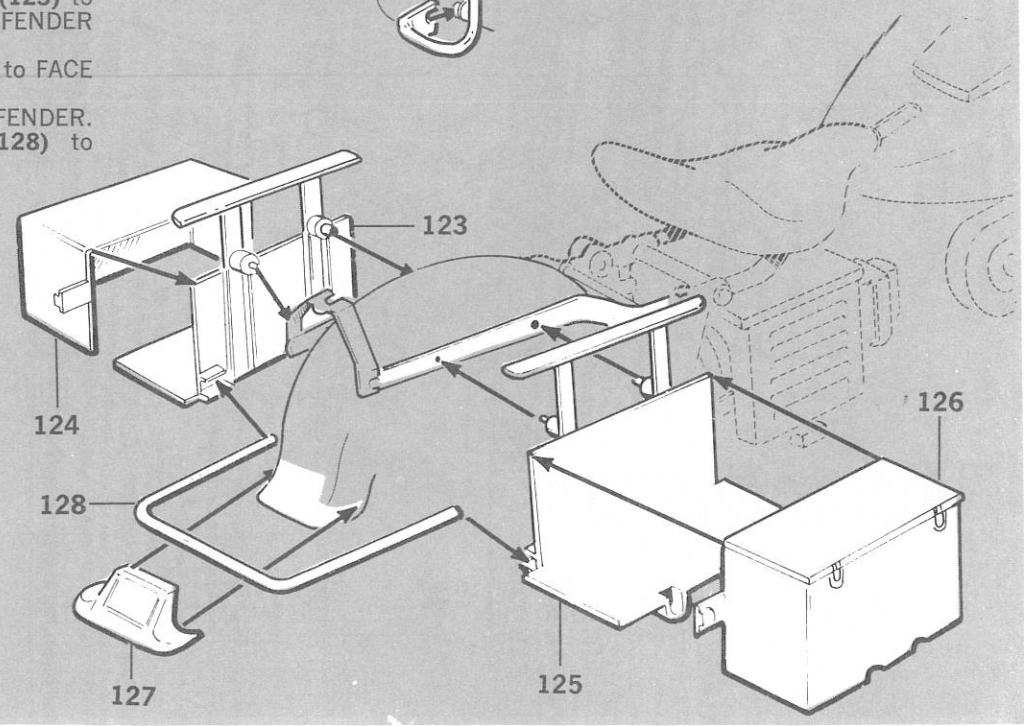

## 16 RADIO AND CRASH BARS

129 RADIO EQUIPMENT BOX
130 LEFT REAR CRASH BAR
131 RIGHT REAR CRASH BAR
132 SIREN
109 SIDE LIGHT HOUSINGS (2 Parts)
133 REAR LIGHT LENS (2 Parts)

1. Cement RADIO BOX **(129)** to SUPPORTS.
2. Cement LEFT **(130)** and RIGHT **(131)** CRASH BARS to FRAME and BOXES.
3. Cement SIREN **(132)** to FRAME TAB.
4. Make two side LIGHTS by cementing remaining HOUSINGS **(109)** to LENSES **(133)**. Cement LIGHTS to BOX BRACKETS.

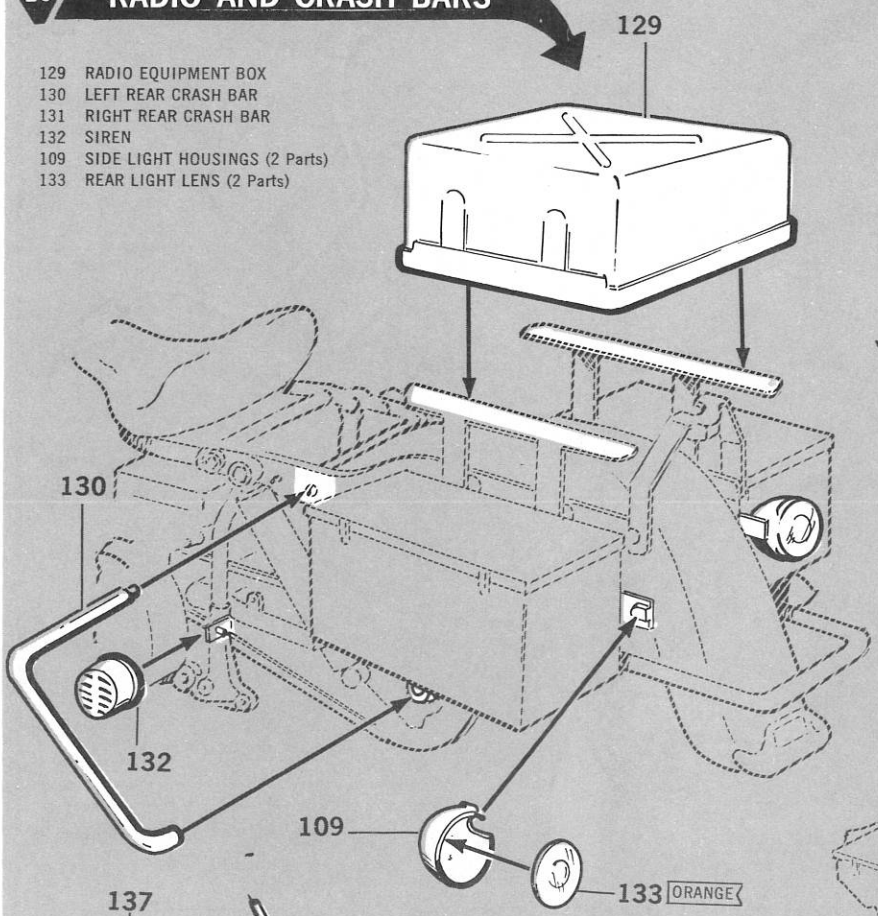


## 17 TAIL LAMPS

134 TAILLIGHT MOUNTING BRACKET
135 TAILLIGHT LENS
136 TAIL AND SIGNAL LAMP CLUSTER
113 SIGNAL LAMP LENS

1. Cement TAILLIGHT BRACKET **(134)** to TAILLIGHT LENS **(135)** and LAMP CLUSTER **(136).** Cement SIGNAL LIGHT LENS **(113)** to HOUSINGS.
2. Cement assembly to REAR FENDER.

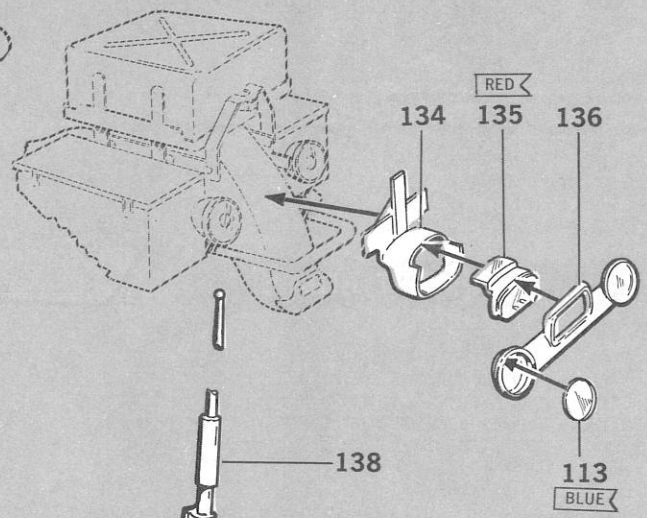


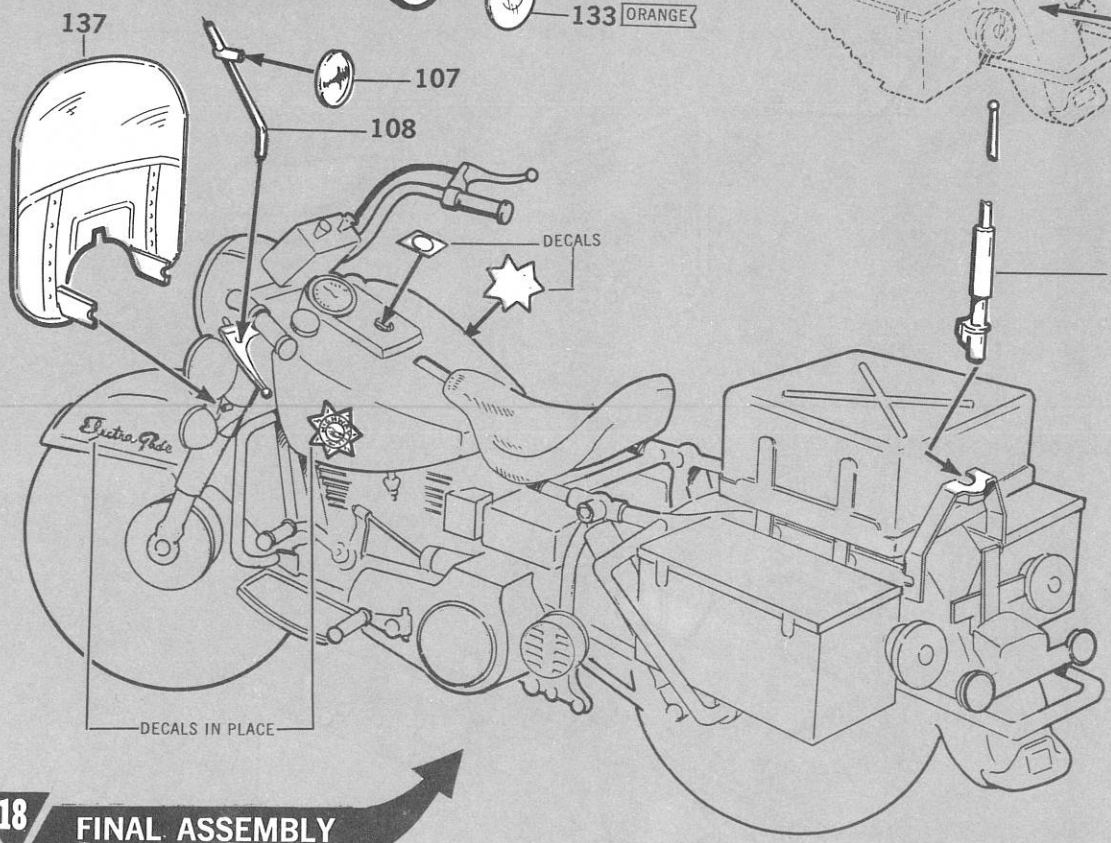


## 18 FINAL ASSEMBLY

107 REAR VIEW MIRROR
108 MIRROR BRACKET
137 WINDSHIELD
138 RADIO ANTENNA

1. Cement MIRROR **(107)** to BRACKET **(108).** Cement BRACKET to HANDLE BARS.
2. Cement WINDSHIELD **(137)** to LIGHT HOUSING and ANTENNA **(138)** to BRACKET
3. Install DECALS following directions on back of sheet.