Revell®
MONOGRAM®

KIT 5835

GRUMMAN F3F-3

Grumman's F3F was the last biplane fighter to enter service with the United States Navy and Marine Corps. With a top speed of 264 miles-per-hour, it was the fastest ship-board biplane in the world.

A total of 54 F3F-1s were produced, and these were delivered in 1936. They were followed by 81 F3F-2s, which had a more powerful engine and improved performance. The last of the series was the F3F-3, which your Monogram model represents. It was practically identical in appearance to the F3F-2, but it was powered by an up-rated Wright Cyclone engine. Twenty-seven F3F-3s were delivered in 1938. Some of these biplanes remained in front line service until 1940, when they were replaced by Grumman F4F Wildcats. The biplanes were then sent to Naval Air Stations where they served as utility aircraft for several more years.

The F3Fs were painted in the colorful paint schemes and markings common to Navy and Marine aircraft in the years just prior to World War II. Your F3F-3 model comes with a selection of markings representing four different aircraft from two squadrons.

FILE COPY

* REPEAT SEVERAL TIMES
* A REPETER PLUSIEURS FOIS

* OPTIONAL PARTS
* PIECES EN OPTION

* DECAL
* DECAL COMANIE

* ALTERNATIVE ASSEMBLY
* ENSEMBLAGE ALTERNATIVE

* CEMENT TOGETHER
* A COLLER

* REMOVE AND THROW AWAY
* A RETIRER ET JETER

* DO NOT CEMENT
* NE PAS COLLER

READ THIS BEFORE YOU BEGIN

- Study the assembly drawings.
- Each plastic part is identified by a number.
- In the assembly drawings, some parts will be marked by a star (★) to indicate chrome plated plastic.
- For better paint and decal adhesion, wash the plastic parts in a mild detergent solution. Rinse and let air dry.
- Check the fit of each piece before cementing in place.
- Use only cement for polystyrene plastic.
- Scrape plating and paint from areas to be cemented.
- Allow paint to dry thoroughly before handling parts.
- Any unused parts may be discarded.

DECAL APPLICATION INSTRUCTIONS

1. Cut desired decal from sheet.
2. Dip decal in water for a few seconds.
3. Place wet decal on paper towel.
4. Wait until decal is movable on paper backing.
5. Place decal in position on model, face up and slide backing away.
6. Press out air bubbles with a soft damp cloth.
7. Milkiness that may appear is for better decal adhesion and will dry clear. Wipe away any excess adhesive.
8. Do not touch decal until fully dry.
9. Allow the decals 48 hours to dry before applying clear coat.

LIRE CE QUI SUIT AVANT DE COMMENCER

- Etudier les schémas de montage.
- Chaque pièce en plastique est identifiée par un numéro.
- Sur les schémas de montage, certaines pièces sont mar quées d'une étoile (★) pour indiquer qu'elles sont en plas tique chromé.
- Pour une meilleure prise de la peinture et des autocollants, laver les pièces en plastique avec une solution détergente peu concentrée. Les rincer et les laisser sécher à l'air.
- Vérifier que chaque pièce s'ajuste bien avant de la coller en place.
- N'utiliser que de la colle pour polystyrène.
- Gratter les parties à coller pour enlever le chrome et la peinture.
- Laisser la peinture bien sécher avant de manipuler les pièces.
- Toute pièce inutilisée peut être jetée.

DIRECTIVES D'APPLICATION DES AUTOCOLLANTS

1. Découper l'autocollant désiré de la feuille.
2. Tremper l'autocollant dans de l'eau pendant quelques secondes.
3. Placer l'autocollant mouillé sur une serviette en papier.
4. Attendez que l'autocollant puisse être déplacé sur son sup port en papier.
5. Mettre l'autocollant en position sur le modèle face sur le dessus et faire glisser le support pour l'enlever.
6. Appuyer avec un chiffon doux humide pour éliminer les bulles d'air.
7. La substance laiteuse qui peut apparaître est destinée à améliorer l'adhésion de l'autocollant et devient incolore au séchage. Essuyer pour enlever tout excédent d'adhésif.
8. Ne pas toucher l'autocollant tant qu'il n'est pas bien sec.
9. Laisser l'autocollant sécher pendant 48 heures avant d'appli quer une couche transparente.

This paint guide is provided to complete this kit as shown on the box.

Ce guide de peinture est fourni pour reproduire le modèle réduit qui apparaît sur la boîte.

AIRCRAFT GRAY	GRIS AVION
INSIGNIA RED	ROUGE
TRUE BLUE	BLEU MOYEN
WILLOW GREEN	VERT MOYEN
FLAT BLACK	NOIR MAT
FLAT WHITE	BLANC MAT
YELLOW ORANGE	JUANE ORANGE
STEEL	ACIER
SILVER	ARGENTÉ

We recommend
ProModeler™ *or* Revell-Monogram *paints.*

If you have any questions or comments , call our hotline at: (800) 833-3570
or, please write to:

Revell-Monogram Consumer Service Department, 8601 Waukegan Road, Morton Grove, Illinois 60053
Be sure to include the kit number, part number, description, your return address and phone number.
Visit our website: www.revell-monogram.com

REVELL-MONOGRAM, INC. Morton Grove, IL. Copyright © 1998. All rights reserved. Made in U.S.A.

85583500200

STEP 1, LANDING GEAR ASSEMBLY

ASSEMBLY NOTE: These instructions show how to build the landing gear so that it will operate. Be careful not to get any glue where the "NO CEMENT" symbols indicate that glue should not be applied. Take care in assembling and operating the landing gear, because it is very fragile. Apply a drop of light machine oil to all pivot points with the tip of a toothpick so that they will operate freely. Also apply a coat of oil to the teeth of the gears. Once you complete the assembly of the landing gear, gently work the gear up and down several times to be sure it operates properly. Some modelers may prefer to glue the landing gear together. Although this will mean that the gear will not operate, it will be sturdier and more durable.

RIGHT LANDING GEAR

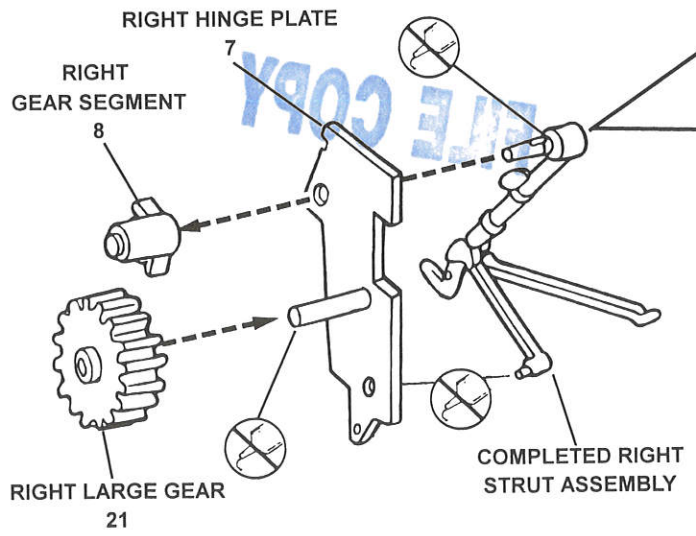

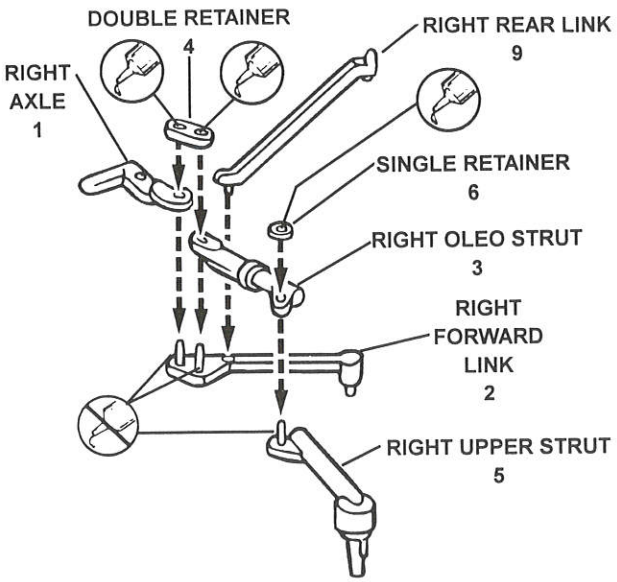

NOTE: After fitting the DOUBLE RETAINER (4) and the SINGLE RETAINER (6) in place, put a very small drop of cement on them in the places indicated by this symbol. Be careful not to let any cement get on the moving parts.

LEFT LANDING GEAR

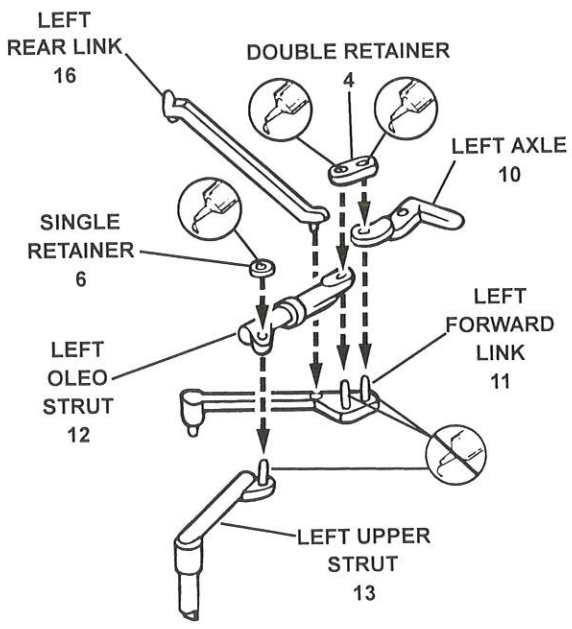

NOTE: After fitting the DOUBLE RETAINER (4) and the SINGLE RETAINER (6) in place, put a very small drop of cement on them in the places indicated by this symbol. Be careful not to let any cement get on the moving parts.

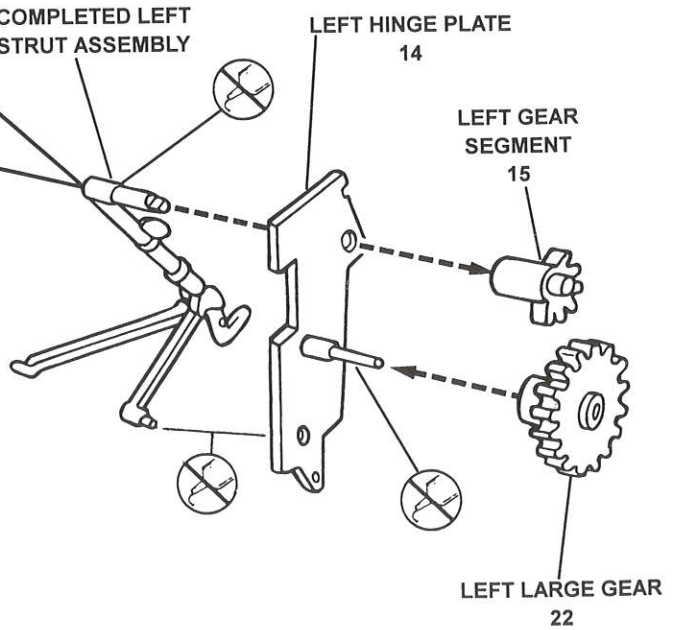

1

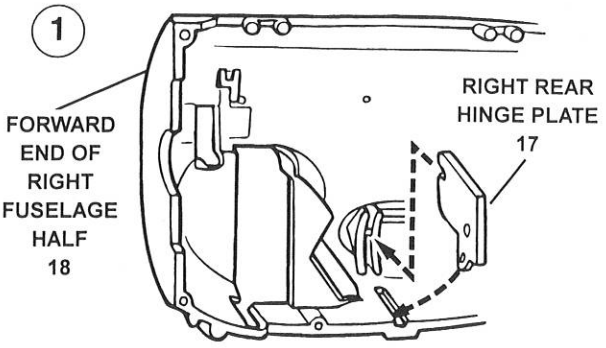

2

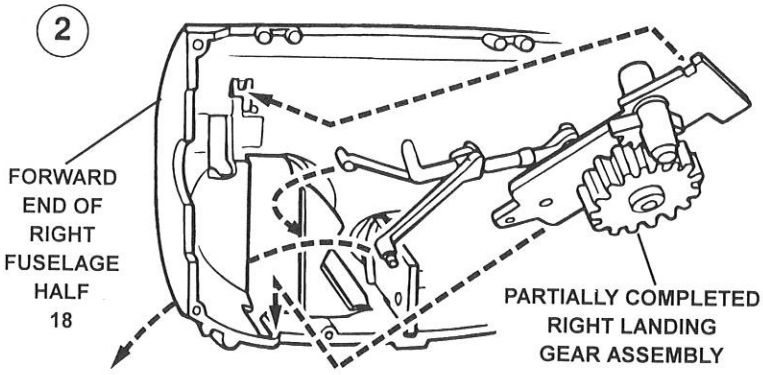

3

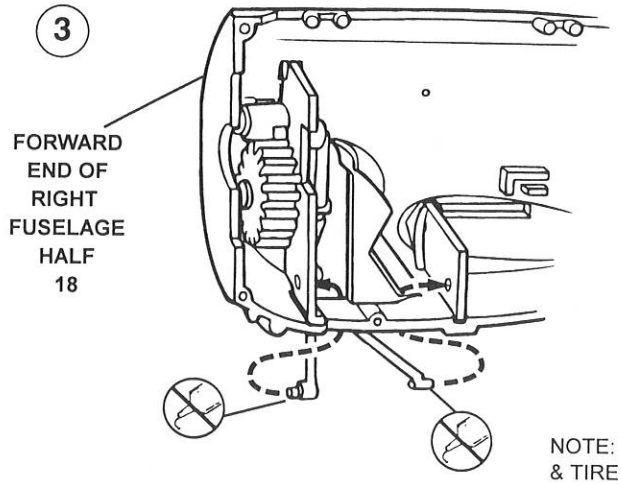

4

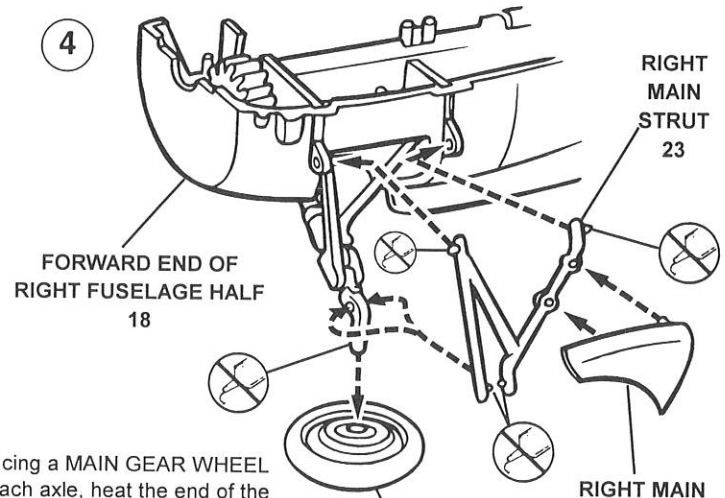

NOTE: After placing a MAIN GEAR WHEEL & TIRE (27) on each axle, heat the end of the axle with a hot knife to prevent the wheel from coming off the axle while allowing it to roll.

RIGHT SIDE SHOWN. REPEAT FOR LEFT SIDE.

(Use LEFT MAIN STRUT (24) left rear hinge plate (19), and fuselage half (20) **LEFT GEAR DOOR (26) for the left landing gear assembly.)**

STEP 2, COCKPIT ASSEMBLY

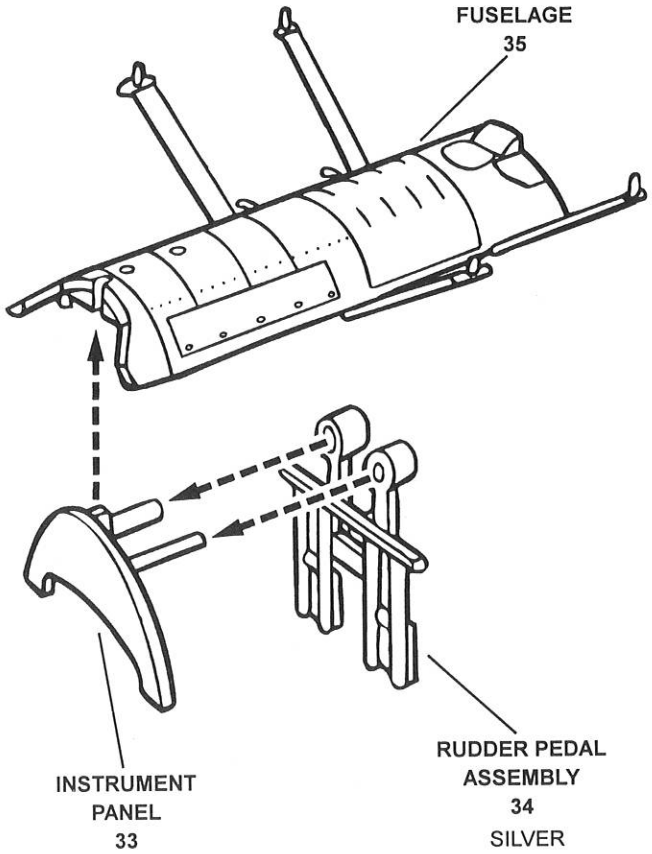

NOTE: Paint the INSTRUMENT PANEL (33) FLAT BLACK. Once the paint has dried, apply DECAL NUMBER 1 to the face of the panel.

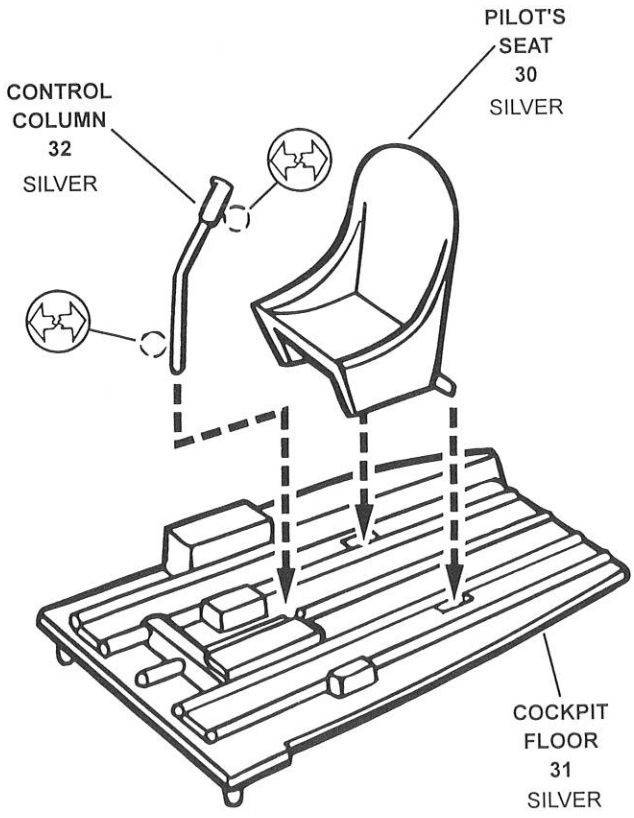

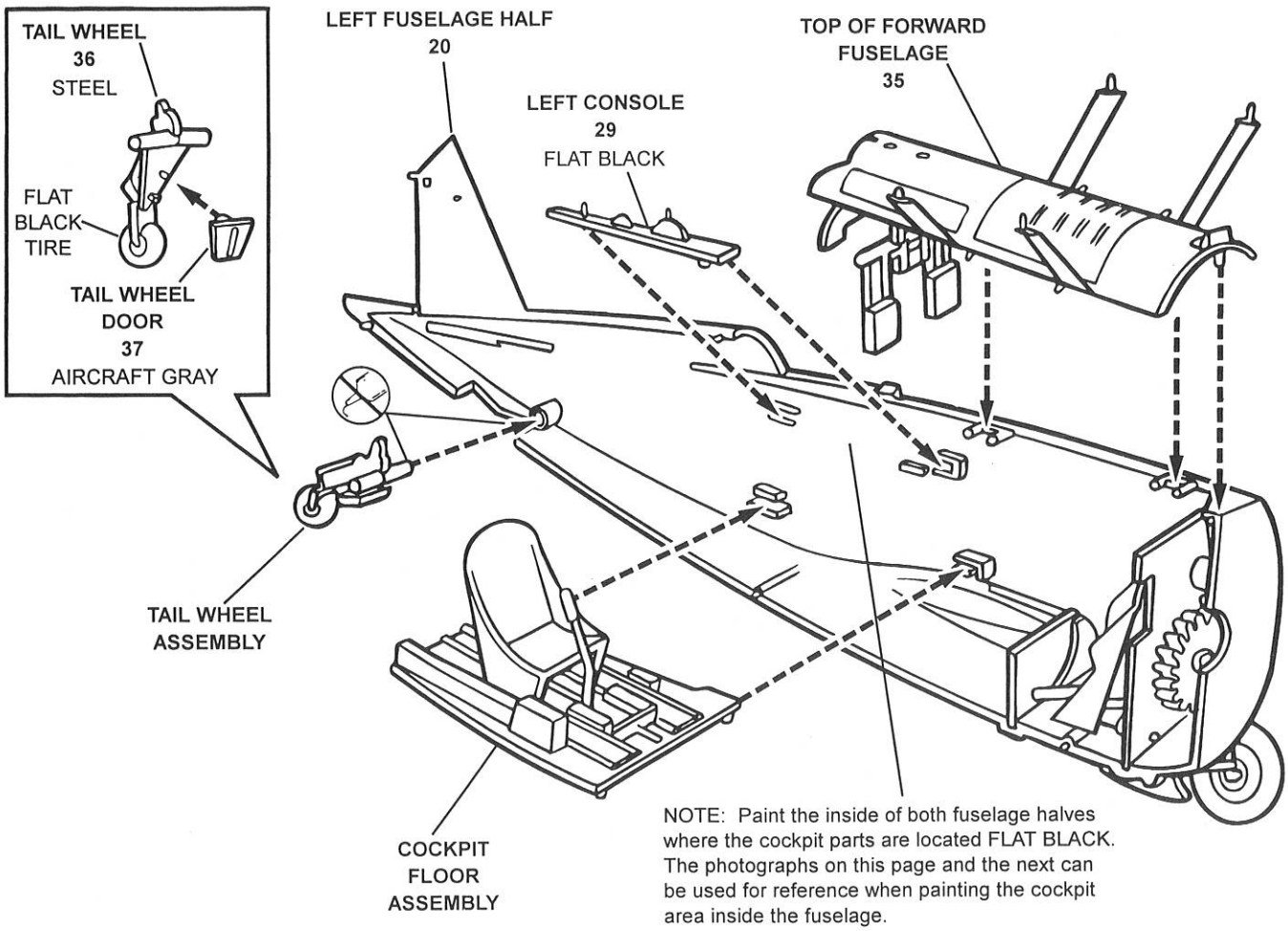
TAIL WHEEL
36
STEEL
FLAT
BLACK
TIRE
TAIL WHEEL
DOOR
37
AIRCRAFT GRAY
LEFT FUSELAGE HALF
20
LEFT CONSOLE
29
FLAT BLACK
TOP OF FORWARD
FUSELAGE
35
TAIL WHEEL
ASSEMBLY
COCKPIT
FLOOR
ASSEMBLY
NOTE: Paint the inside of both fuselage halves where the cockpit parts are located FLAT BLACK. The photographs on this page and the next can be used for reference when painting the cockpit area inside the fuselage.

STEP 3, FUSELAGE ASSEMBLY

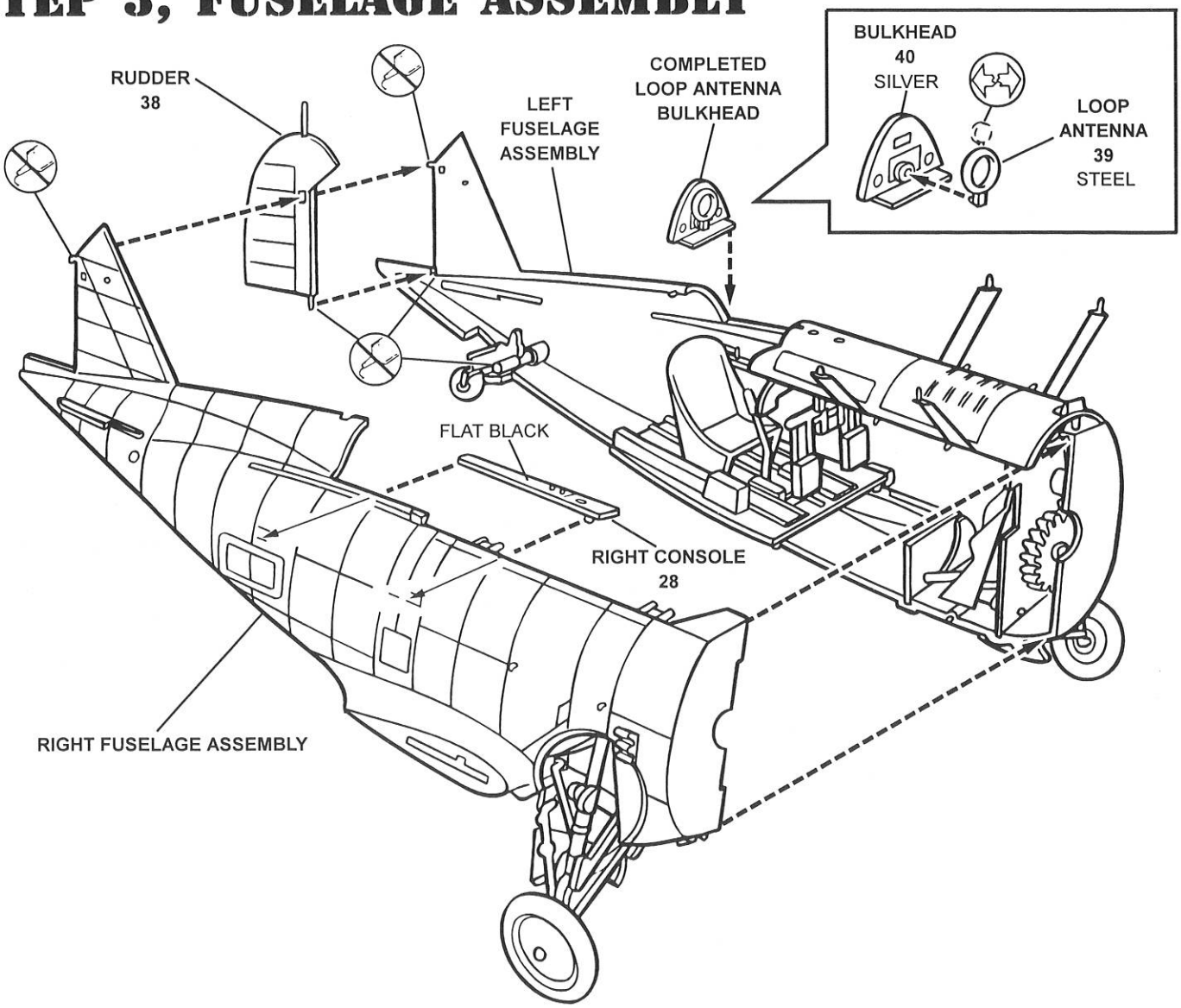

STEP 4, ENGINE ASSEMBLY

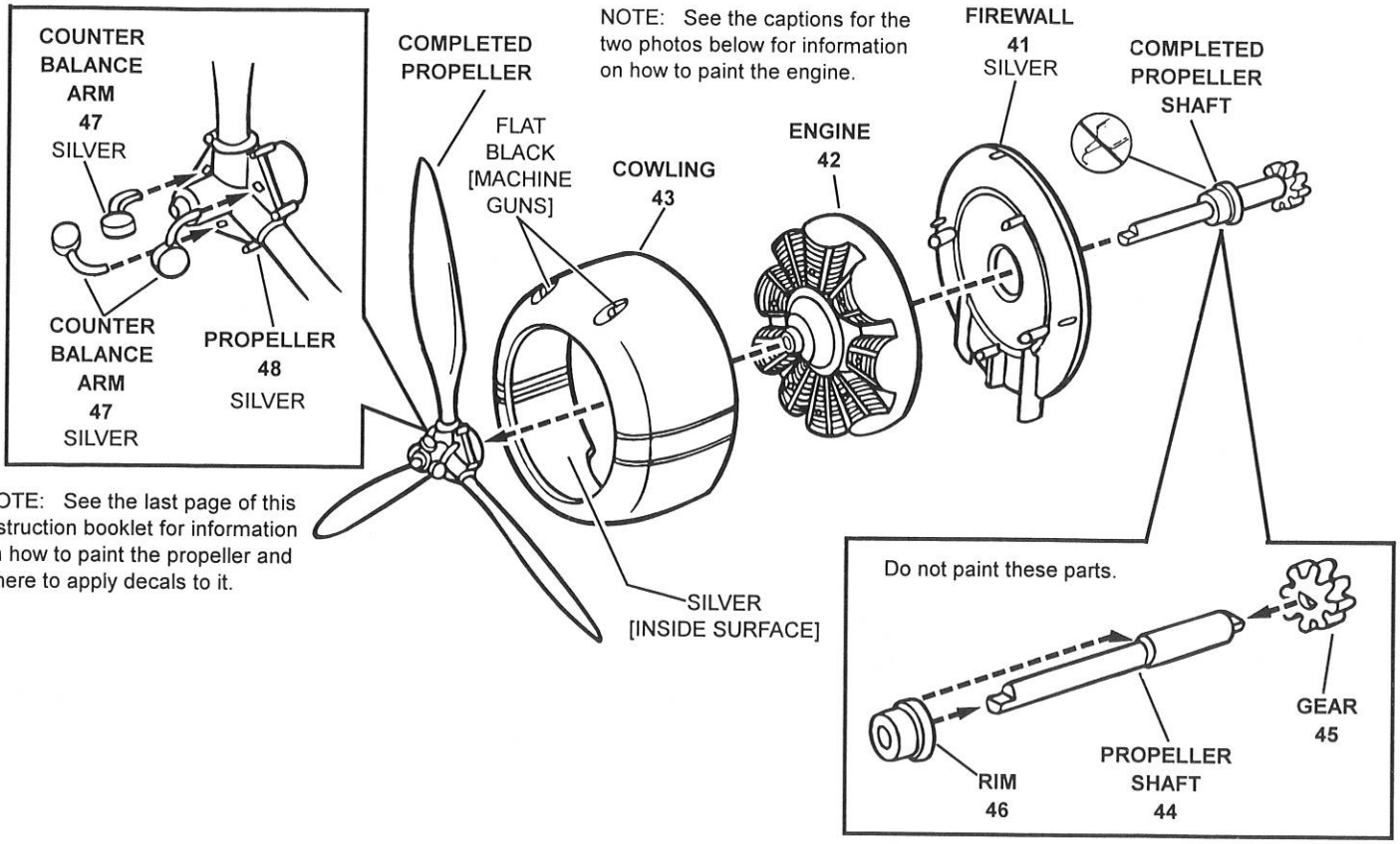

NOTE: See the captions for the two photos below for information on how to paint the engine.

NOTE: See the last page of this instruction booklet for information on how to paint the propeller and where to apply decals to it.

NOTE: Do not use the GEAR (45) if you decided to glue your landing gear in place during Step 1.

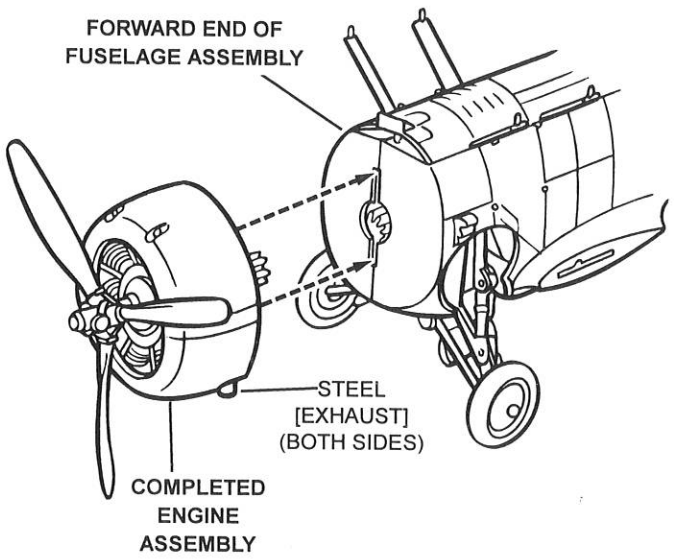

NOTE: Once the assembly is complete, check the operation of the landing gear. Hold the model so that you are looking at the front. Notice that the propeller will move forward and backward slightly in the engine. Pull the propeller as far forward as it will go, then rotate it slowly counter-clockwise to raise the landing gear. Rotate it slowly clockwise to extend the landing gear. Push the propeller into the engine as far as it will go in order to turn the propeller without raising or lowering the landing gear.

STEP 5, TAIL ASSEMBLY

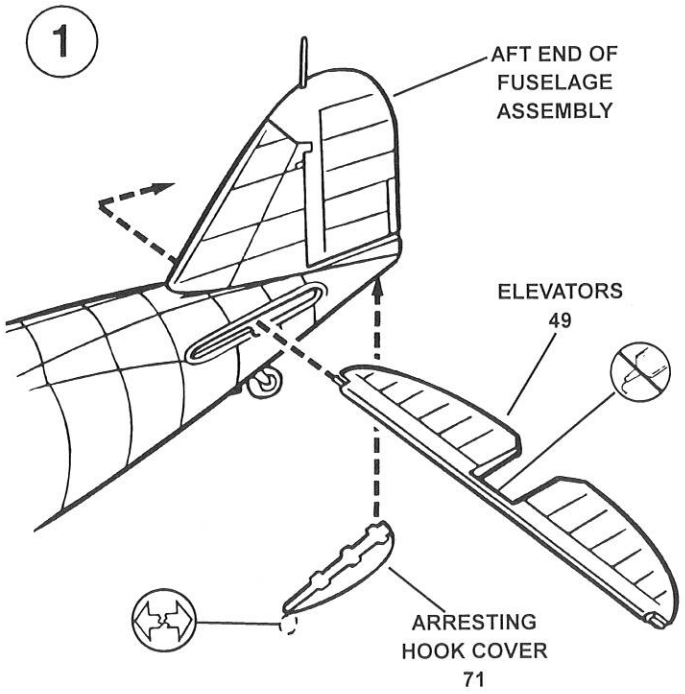

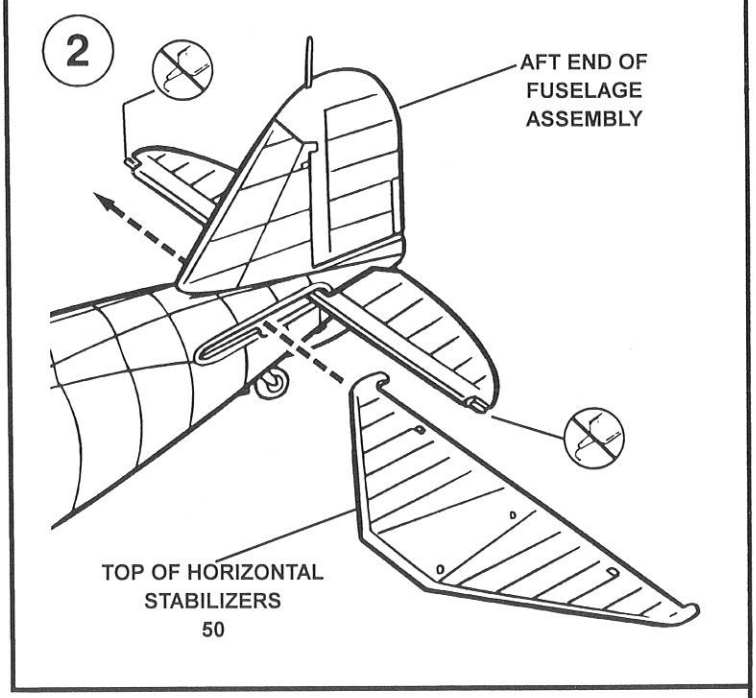

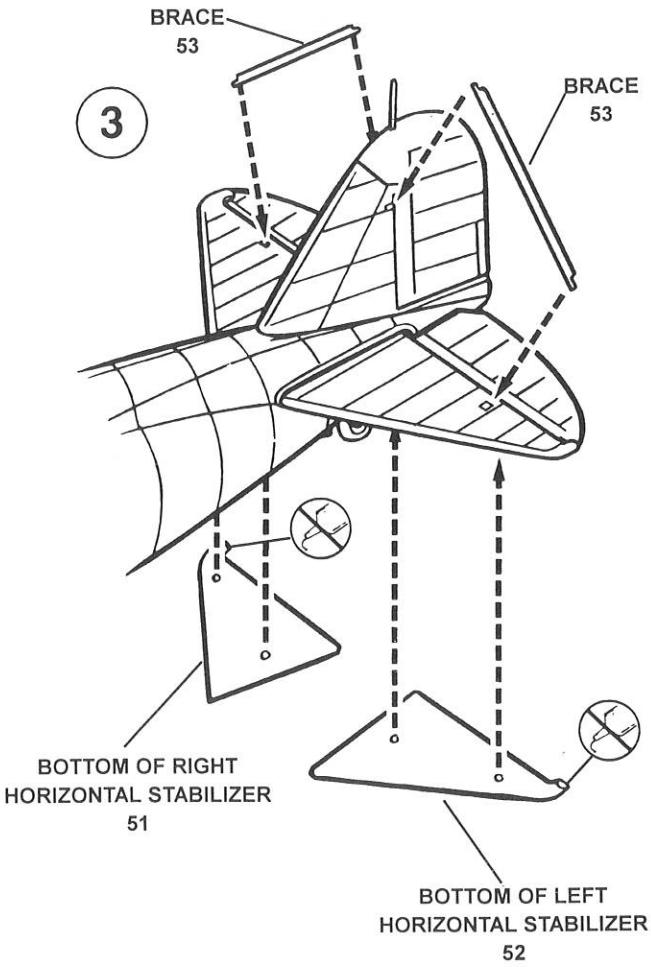

NOTE: To insure that the elevators move up and down, do not let any glue get on parts 51 and 52 at the outer corners as indicated by the NO CEMENT symbols.

STEP 6, WING ASSEMBLY & RIGGING

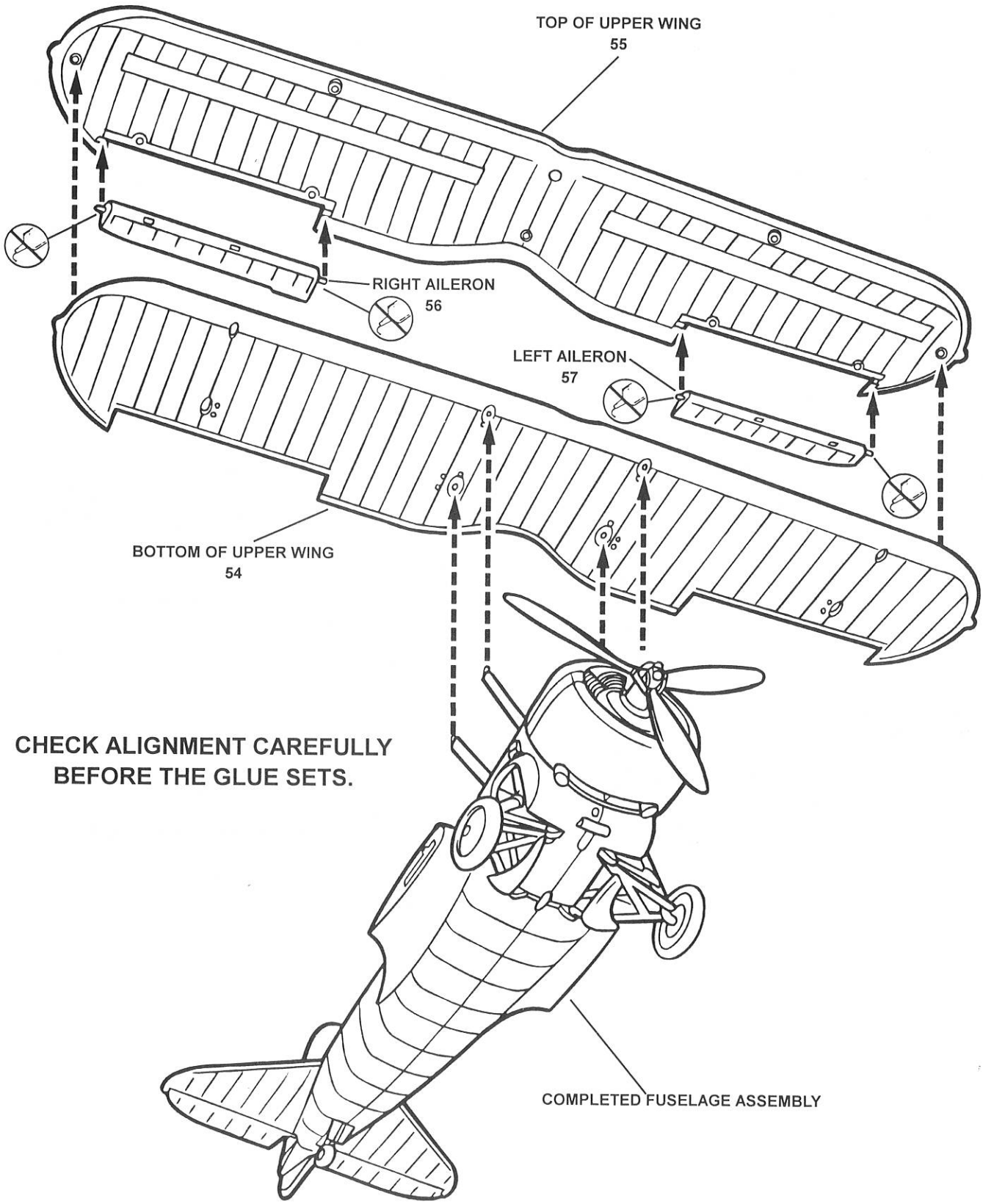

RIGHT SIDE

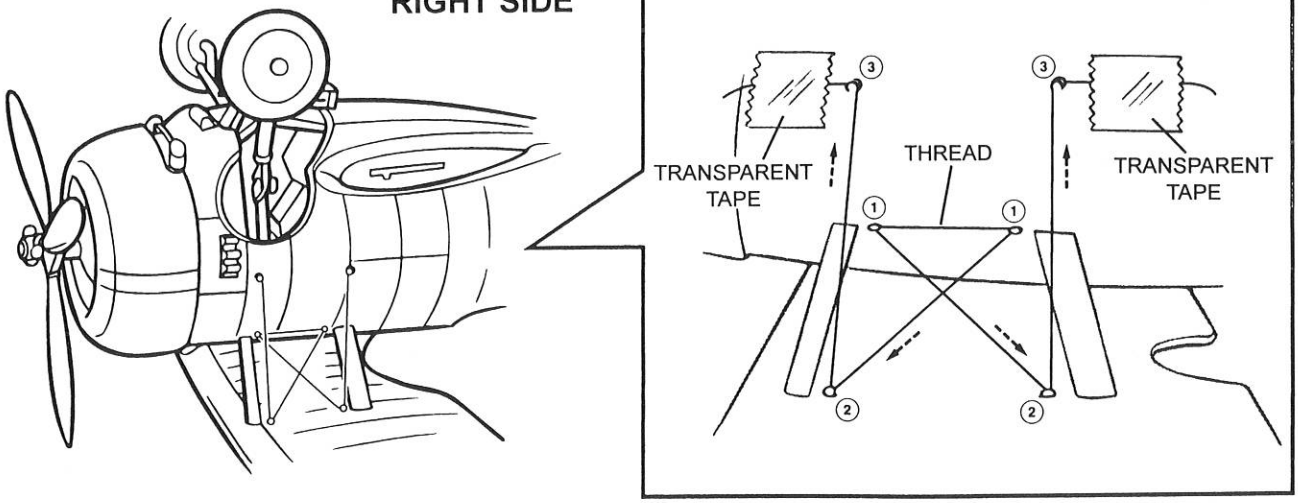

LEFT SIDE

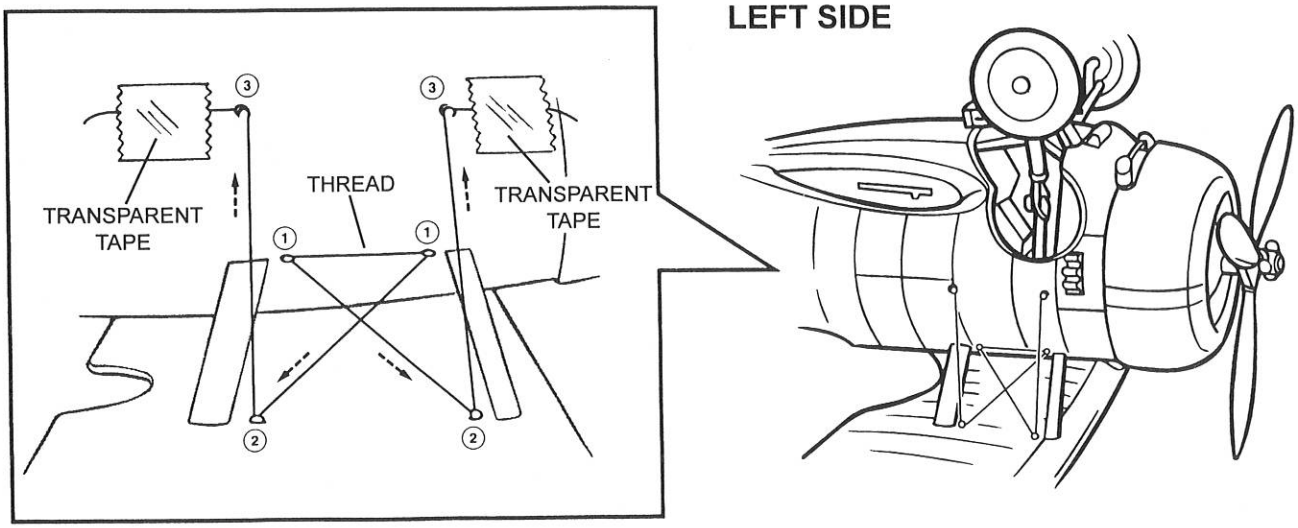

OPTIONAL

ASSEMBLY NOTE: The rigging for your model can be made from nylon thread or monofilament fishing line. Turn the model upside down and begin by cutting off a length of thread about eight inches long. Center the thread over the two small pins (1) on the fuselage as indicated in the drawings, then hook the thread over the pins (1) using tweezers or the tip of a toothpick. Cross the thread as shown in the drawings and hook it under the pins (2) on the underside of the top wing. Next, hook the ends of the thread over the pins (3) on the sides of the fuselage. Fasten one end of the thread to the fuselage with transparent tape, then pull the thread bracing tight and fasten the other end to the cowling with tape. Now apply a small drop of cement over each of the small pins with the tip of a toothpick to hold the thread in place. Once the glue has dried, remove the tape and trim off any excess thread. Repeat the procedure for the other side of the aircraft.

CHECK ALIGNMENT CAREFULLY BEFORE THE GLUE SETS.

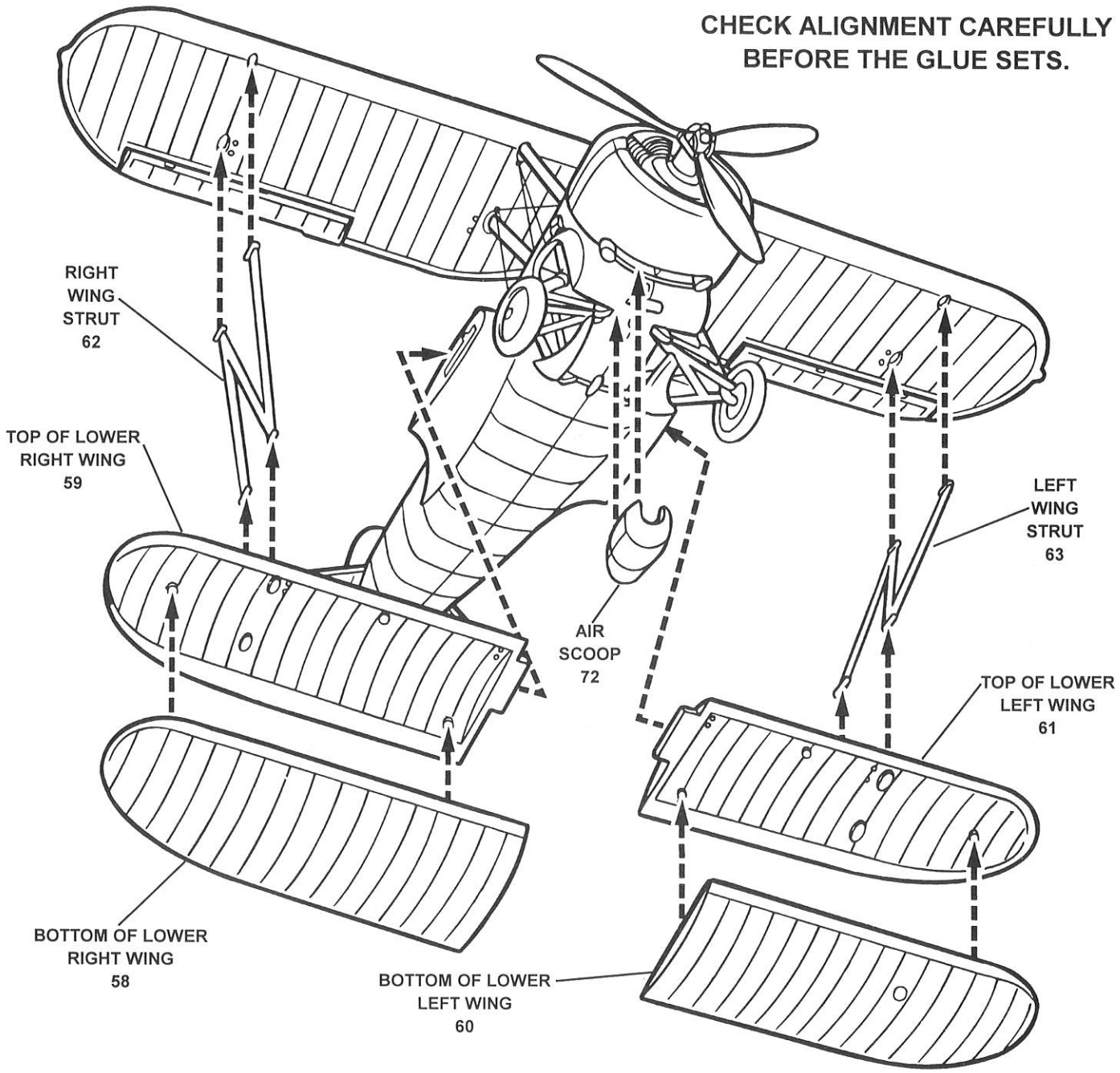

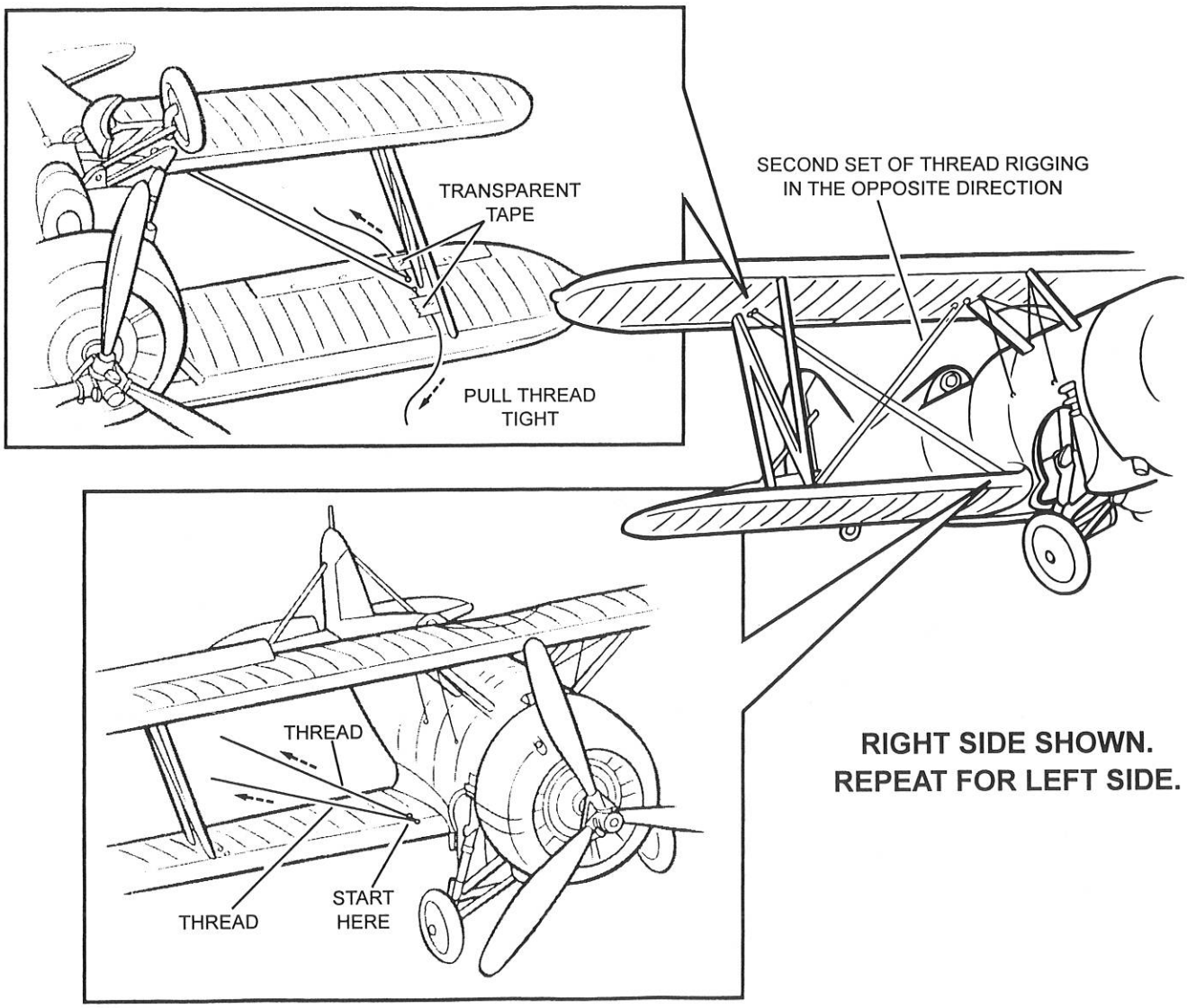

RIGHT SIDE SHOWN.
REPEAT FOR LEFT SIDE.

OPTIONAL

ASSEMBLY NOTE: At this time, additional rigging must be added to each wing. Cut off a length of thread sixteen inches long. Center the thread on the two pins shown in the lower drawing and hook it under the pins. Apply cement over the pins to hold the thread in place. Next, turn the model over and hook one end of the thread under the pin on the wing and fasten the end to the bottom of the top wing with tape as shown in the upper drawing. Hook the other end of the thread under the second pin on the underside of the top wing and pull the thread tight. Use another piece of tape to hold the thread in place while you use the tip of a toothpick to apply a drop of cement to each pin. Once the glue dries, remove the tape and cut off any excess thread. Now follow the same procedure to add a second set of thread rigging to the wing in the opposite direction as shown in the middle drawing to the right. Once this is completed, repeat the process for the other wing.

STEP 7, WINDSCREEN, CANOPY, AND PILOT

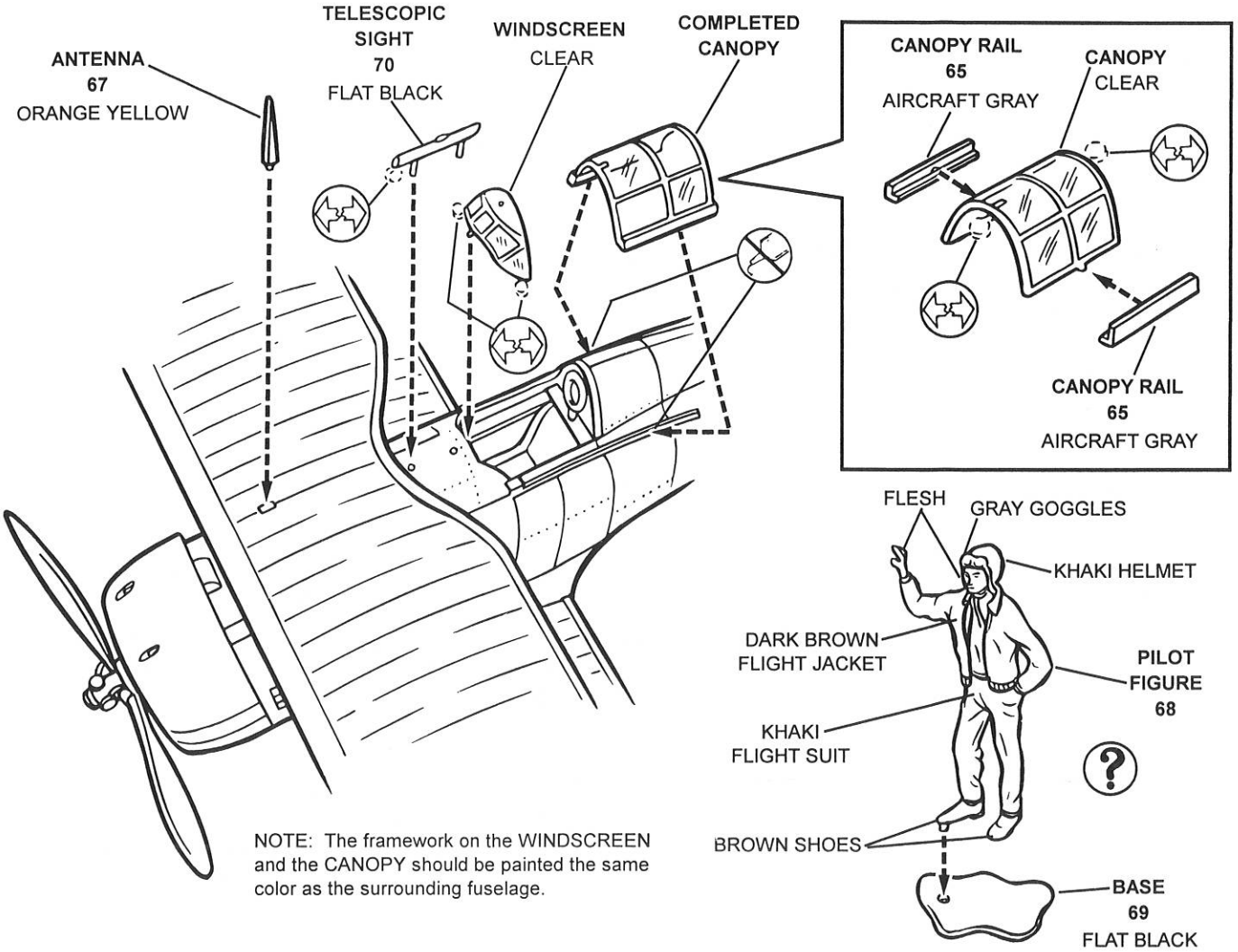

NOTE: The framework on the WINDSCREEN and the CANOPY should be painted the same color as the surrounding fuselage.

GRUMMAN F3F-3

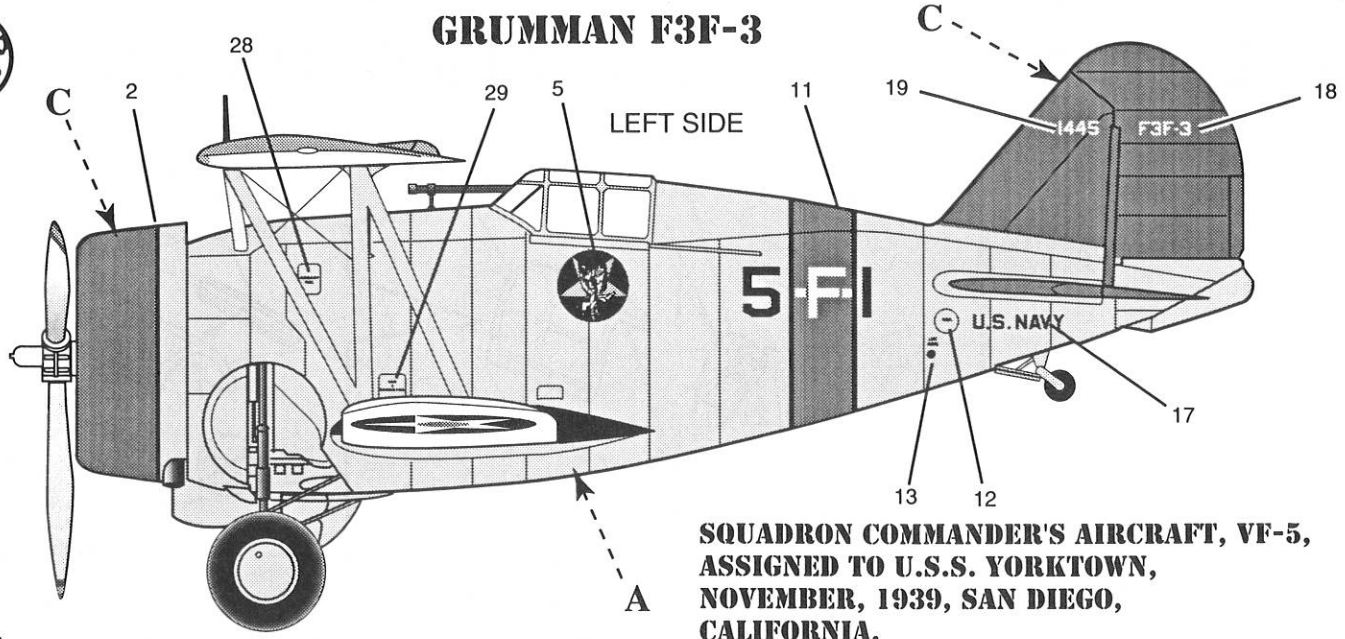

SQUADRON COMMANDER'S AIRCRAFT, VF-5, ASSIGNED TO U.S.S. YORKTOWN, NOVEMBER, 1939, SAN DIEGO, CALIFORNIA.

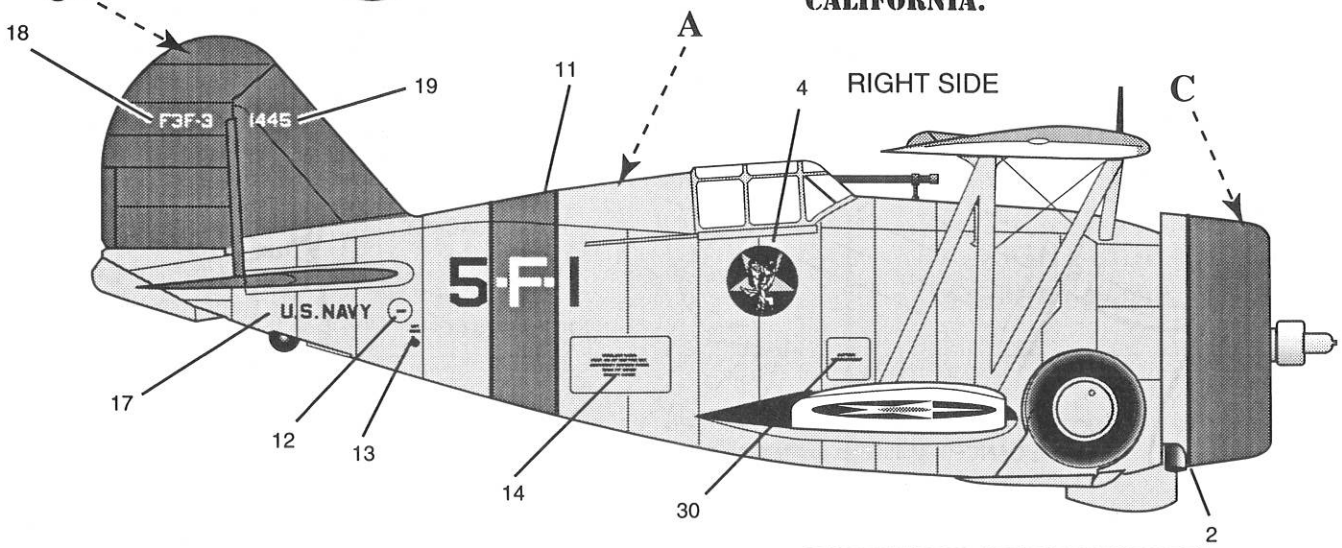

SIXTH AIRCRAFT FROM THE 3RD SECTION, 2ND DIVISION, VF-6, U.S.S. ENTERPRISE, AUGUST, 1940.

NOTE: STENCILING AND INSIGNIA AS ON 5-F-1.

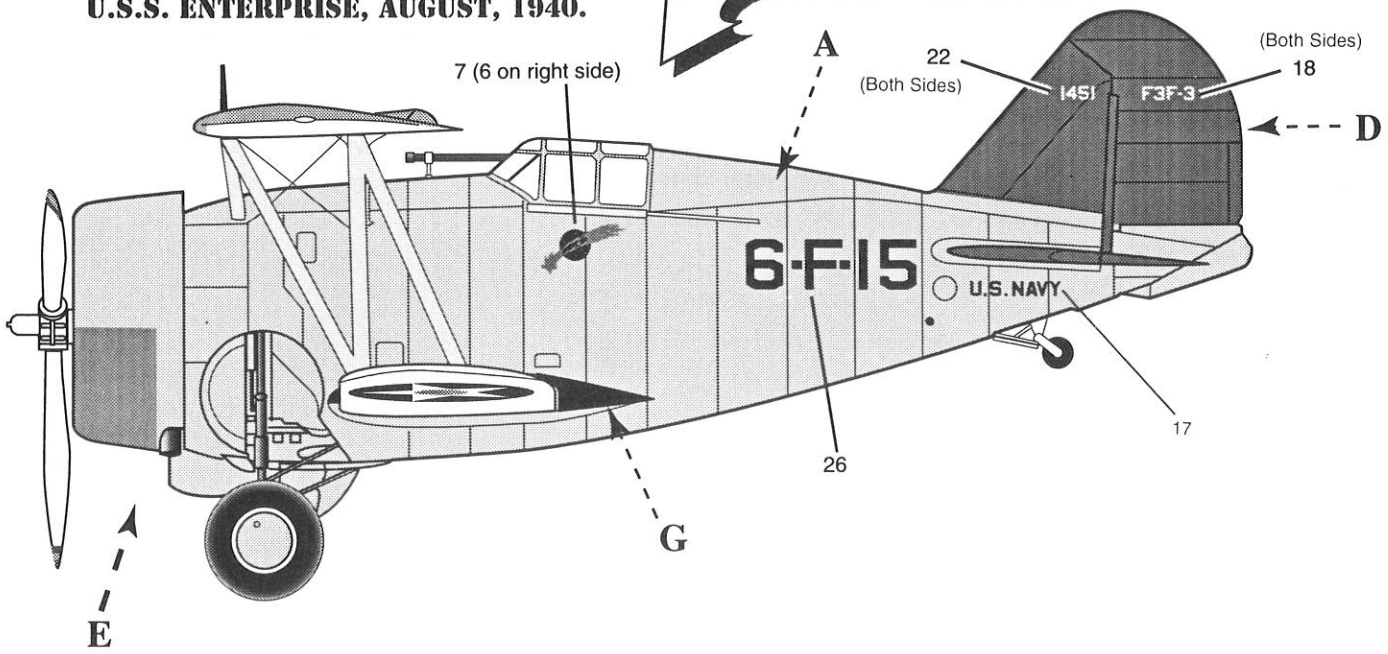

AIRCRAFT 2 AND 3 FROM THE 1ST SECTION, 1ST DIVISION, VF-5.

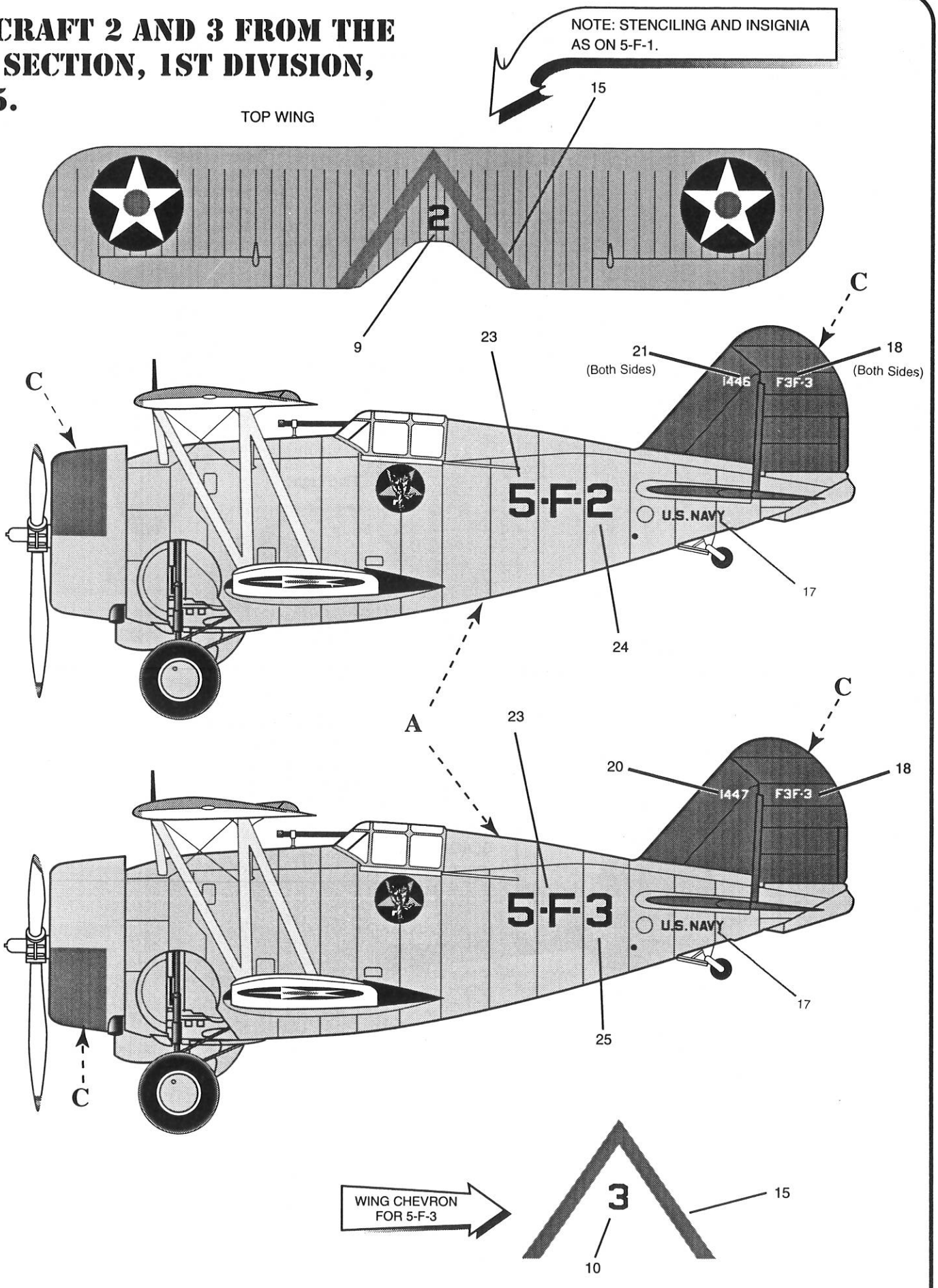

GRUMMAN F3F-3

COLOR KEY

A		Aircraft Gray FS 16473
B		Orange Yellow FS 13538
C		Insignia Red FS 11136
D		True Blue FS 15102
E		Willow Green FS 14187
G		Silver Paint

DECAL APPLICATION INSTRUCTIONS

1.) Wash plastic parts in mild detergent solution, then rinse and let dry.
2.) Cut the desired decal from the sheet.
3.) Dip the decal in water for a few seconds.
4.) Place the wet decal on a paper towel.
5.) Wait until the decal is movable on its backing paper.
6.) Place the decal in position on the model with its face up, then slide the backing away.
7.) Press out any air bubbles with a soft damp cloth.
8.) The milkiness that may appear is for better decal adhesion, but will dry clear.
9.) Wipe away any excess adhesive.
10.) Do not touch the decal until it is dry.

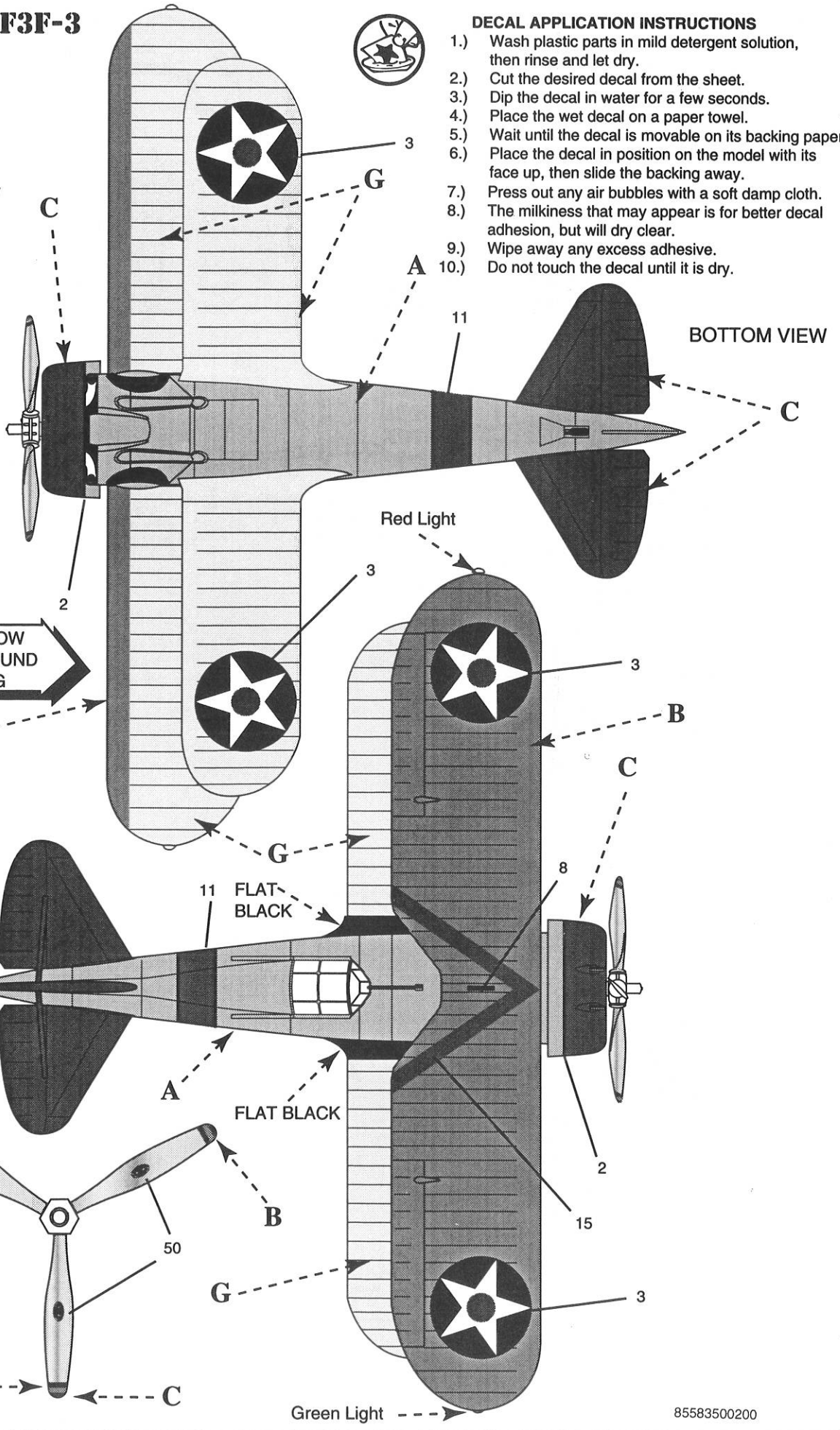

85583500200