KIT 2148

85214800200

'69 Camaro® Z/28®

Chevrolet® introduced the wildly successful Camaro® in 1967 to compete with similarly sized and proportioned "ponycars" from other manufacturers. Initially, the largest engine available was the big-block 396 cubic inch V8. It produced plenty of horsepower for straight-line acceleration but also produced a lot of weight for the front end, which harmed the handling.

With the announcement of the Sports Car Club of America's new Trans-Am Sedan Championship, Chevy® knew they had to have an entry. While not officially endorsing racing activities, Chevrolet® knew from stock car competition that if your car won on Sunday, you could expect a showroom full of people on Monday. The problem they faced was that the SCCA had a 305 cubic inch limit on engine displacement. The Chevy® 327 was too big while the 283 was not known for its performance. The solution was to put the crankshaft from the 283 into the 327's block, resulting in 302 cubic inches of displacement. Not only was the resulting engine powerful, but also light in weight, enabling the engineers to focus on the handling. Rated somewhat conservatively at 290 horsepower, the V8 was included in a "special performance package" that had the option code of Z/28® in the order books. By 1969, the Z/28® package also included special front and rear suspension, dual exhaust with "deep-tone" mufflers, heavy duty cooling, a quicker steering ratio, white lettered wide oval tires and the now familiar rally stripes in white or black. Rarely seen performance options included a cross-ram intake manifold with dual 4 bbl. carbs and special "chambered" exhaust, both of which are replicated in scale in your Revell kit.

Due to the delay in getting the all-new 1970 Camaro® ready for production, the '69 model remained in production for several extra months-until February 1970. As a result, the '69 model was one of the best selling years for the Camaro® with over 243,000 copies sold.

*** REPEAT SEVERAL TIMES**
** A REPETER PLUSIEURS FOIS*

*** OPTIONAL PARTS**
** PIECES EN OPTION*

*** DECAL**
** DECAL COMANIE*

*** ALTERNATIVE ASSEMBLY**
** ENSEMBLAGE ALTERNATIVE*

*** CEMENT TOGETHER**
** A COLLER*

*** REMOVE AND THROW AWAY**
** A RETIRER ET JETER*

*** DO NOT CEMENT**
** NE PAS COLLER*

READ THIS BEFORE YOU BEGIN

* Study the assembly drawings.
* Each plastic part is identified by a number.
* In the assembly drawings, some parts will be marked by a star (★) to indicate chrome plated plastic.
* For better paint and decal adhesion, wash the plastic parts in a mild detergent solution. Rinse and let air dry.
* Check the fit of each piece before cementing in place.
* Use only cement for polystyrene plastic.
* Scrape plating and paint from areas to be cemented.
* Allow paint to dry thoroughly before handling parts.
* Any unused parts may be discarded.

DECAL APPLICATION INSTRUCTIONS

1. Cut desired decal from sheet.
2. Dip decal in water for a few seconds.
3. Place wet decal on paper towel.
4. Wait until decal is movable on paper backing.
5. Place decal in position on model, face up and slide backing away.
6. Press out air bubbles with a soft damp cloth.
7. Milkiness that may appear is for better decal adhesion and will dry clear. Wipe away any excess adhesive.
8. Do not touch decal until fully dry.
9. Allow the decals 48 hours to dry before applying clear coat.

NOTE: Decals are compatible with setting solutions or solvents.

LIRE CE QUI SUIT AVANT DE COMMENCER

* Etudier les schémas de montage.
* Chaque pièce en plastique est identifiée par un numéro.
* Sur les schémas de montage, certaines pièces sont marquées d'une étoile (★) pour indiquer qu'elles sont en plastique chromé.
* Pour une meilleure prise de la peinture et des autocollants, laver les pièces en plastique avec une solution détergente peu concentrée. Les rincer et les laisser sécher à l'air.
* Vérifier que chaque pièce s'ajuste bien avant de la coller en place.
* N'utiliser que de la colle pour polystyrène.
* Gratter les parties à coller pour enlever le chrome et la peinture.
* Laisser la peinture bien sécher avant de manipuler les pièces.
* Toute pièce inutilisée peut être jetée.

DIRECTIVES D'APPLICATION DES AUTOCOLLANTS

1. Découper l'autocollant désiré de la feuille.
2. Tremper l'autocollant dans de l'eau pendant quelques secondes.
3. Placer l'autocollant mouillé sur une serviette en papier.
4. Attendez que l'autocollant puisse être déplacé sur son support en papier.
5. Mettre l'autocollant en position sur le modèle face sur le dessus et faire glisser le support pour l'enlever.
6. Appuyer avec un chiffon doux humide pour éliminer les bulles d'air.
7. La substance laiteuse qui peut apparaître est destinée à améliorer l'adhésion de l'autocollant et devient incolore au séchage. Essuyer pour enlever tout excédent d'adhésif.
8. Ne pas toucher l'autocollant tant qu'il n'est pas bien sec.
9. Laisser l'autocollant sécher pendant 48 heures avant d'appliquer une couche transparente.

REMARQUE: Les autocollants sont compatibles avec les solutions de fixage ou les solvants.

This optional paint guide is provided if you choose to detail paint your model.

Ce guide de peinture vous sera fourni si vous choisissez de peindre votre modèle en détail.

Aluminum	*Aluminium*
Gloss Black	*Noir brillant*
Gloss Red	*Rouge brillant*
Metallic Blue	*Bleu Metallise*
Semigloss Black	*Noir satiné*
Metallic Orange	*Orange Metallise*
Silver	*Argent*
Steel	*Acier*
Turn Signal Amber	*Feu clignotant de Direction ambre*
White	*Blanc*
Wood Grain	*Bois*

If you have any questions or comments, call our hotline at: (800) 833-3570
or, please write to:

Revell-Monogram Consumer Service Department, 725 Landwehr Road, Northbrook, Illinois 60062

Be sure to include the plan number (85214800200), part number, description, your return address and phone number.

Visit our website: www.revellmonogram.com

REVELL-MONOGRAM, LLC Northbrook, IL. Copyright © 2006. All rights reserved.

1 FRONT SUSPENSION ASSEMBLY

A

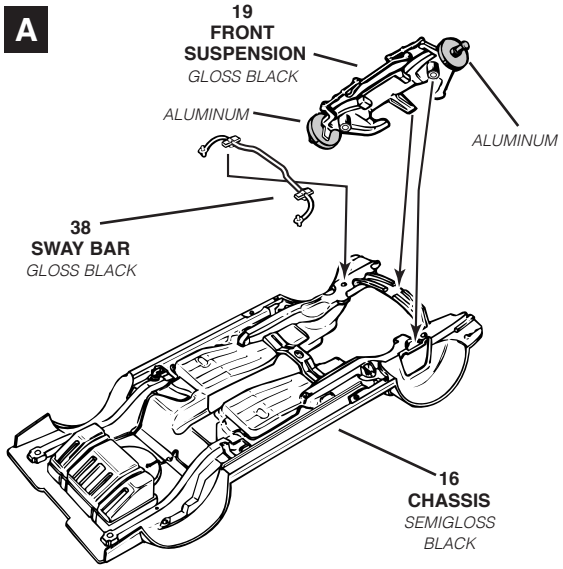

B

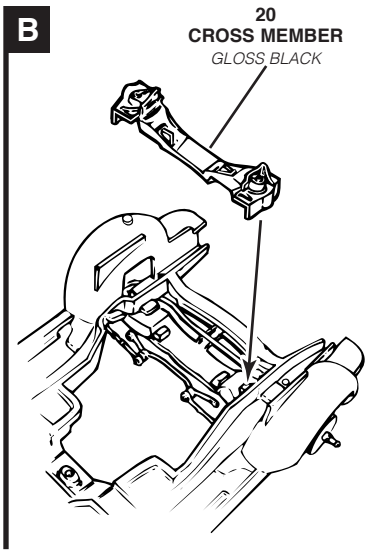

C

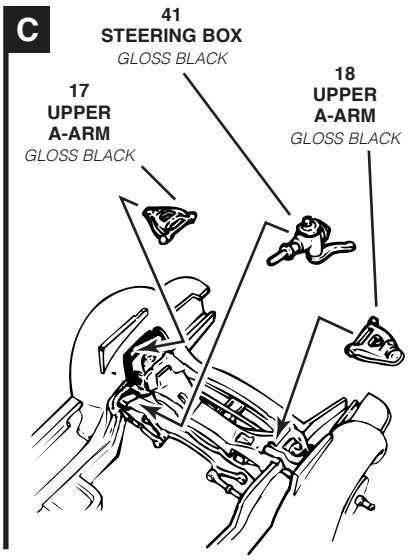

2 ENGINE ASSEMBLY

A

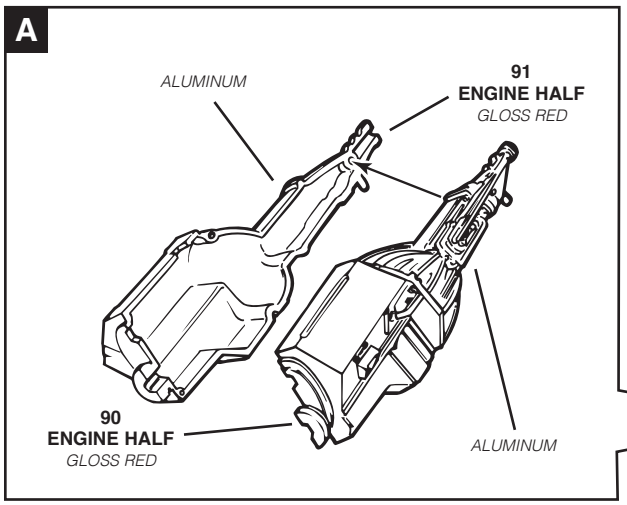

B

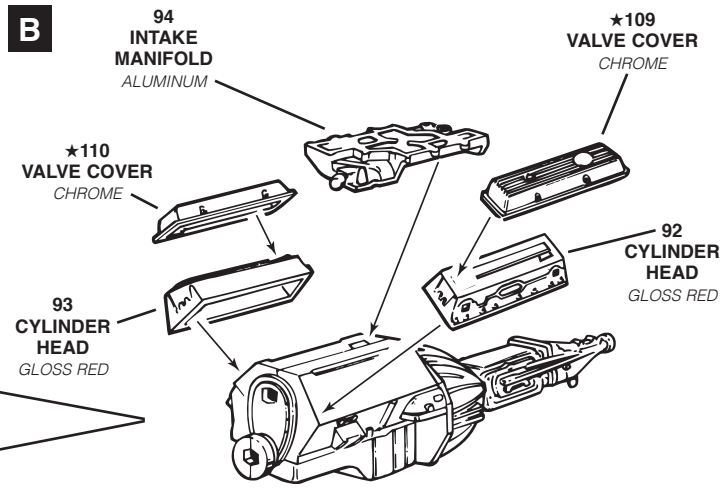

C

RIGHT SIDE

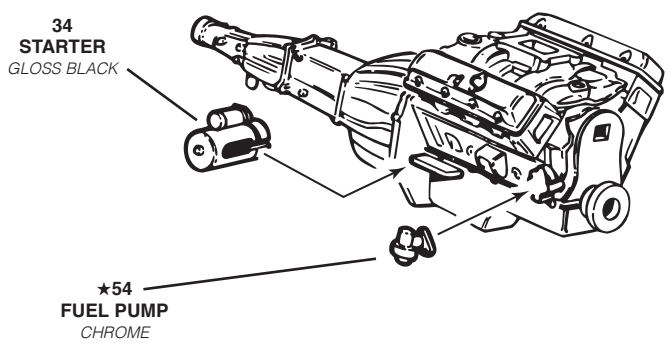

D

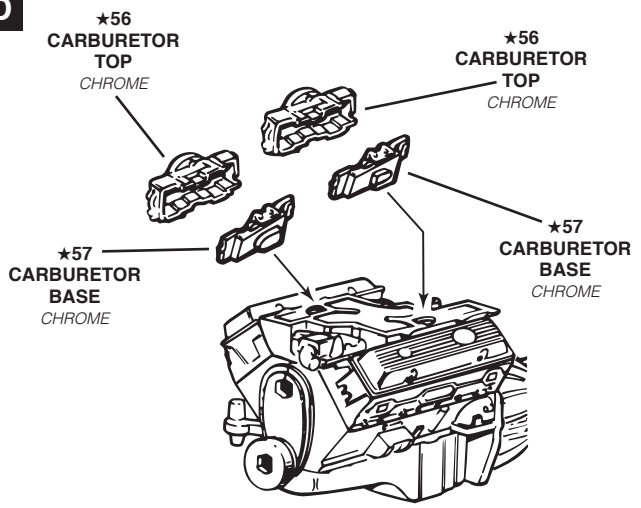

2 ENGINE ASSEMBLY *CONTINUED*

E

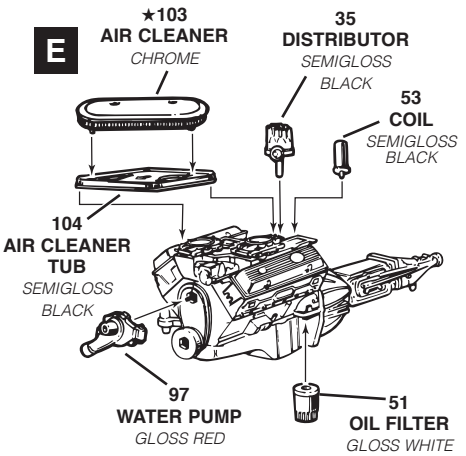

F

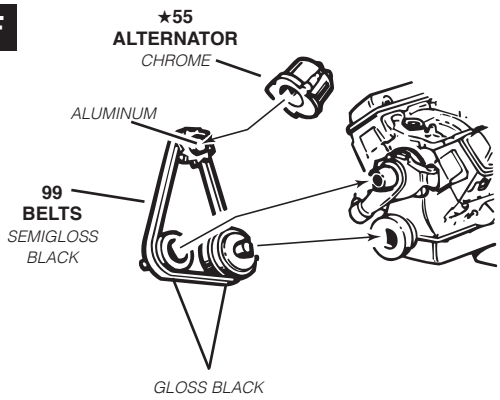

G

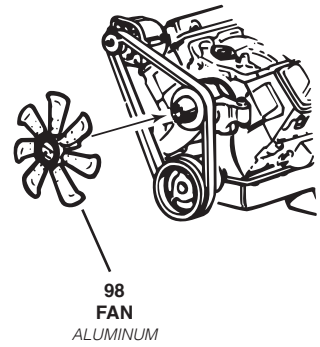

3 EXHAUST ASSEMBLY

RIGHT

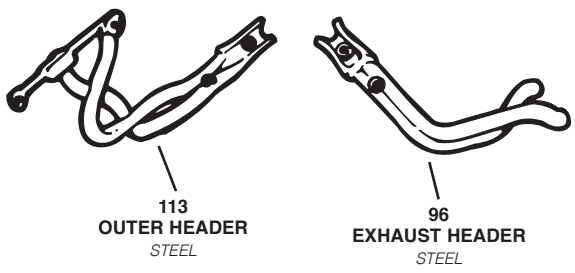

A

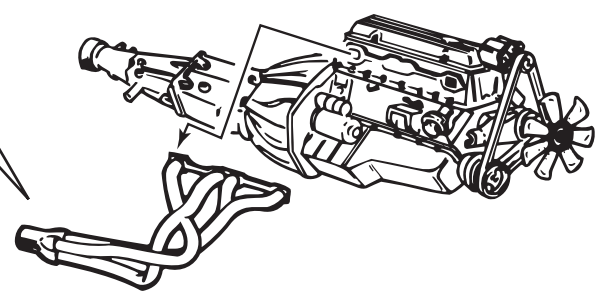

B

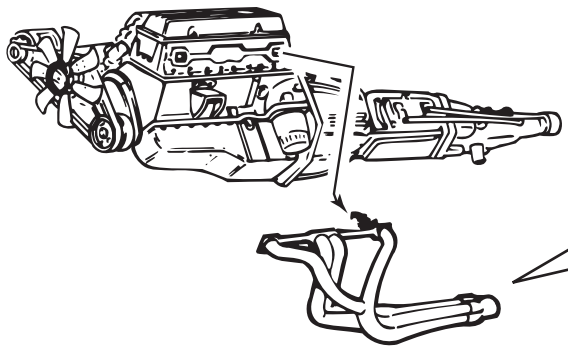

LEFT

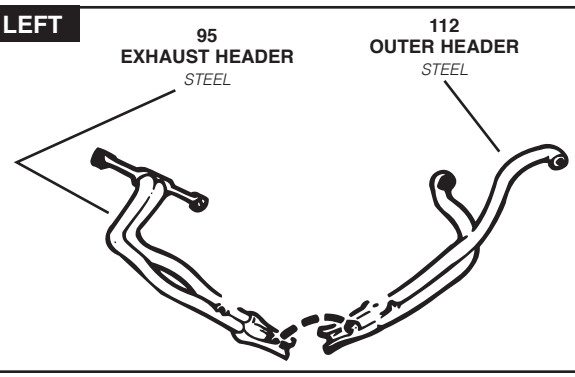

C

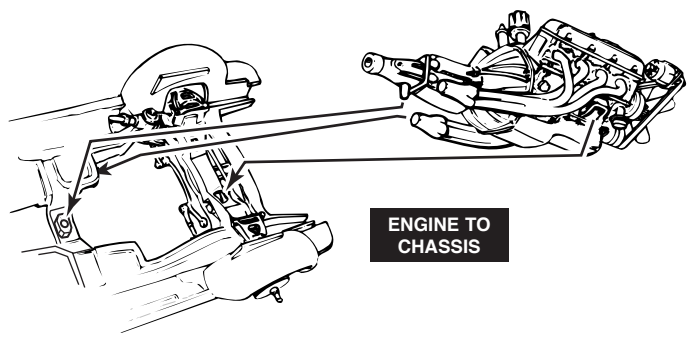

4 RADIATOR ASSEMBLY

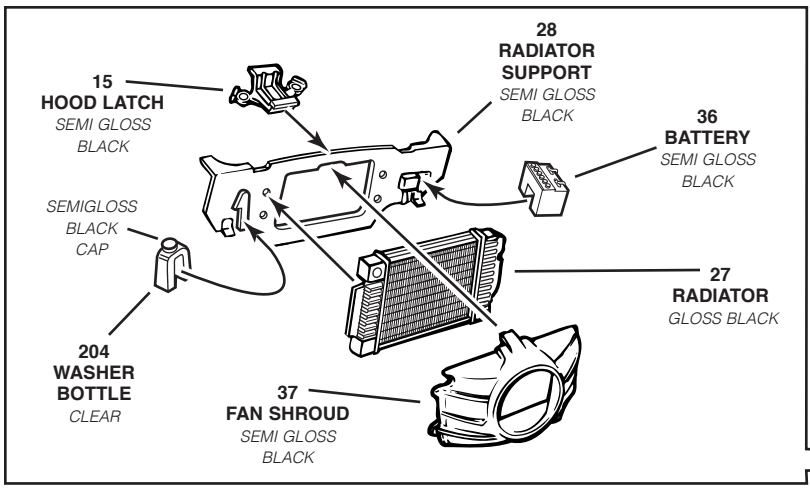

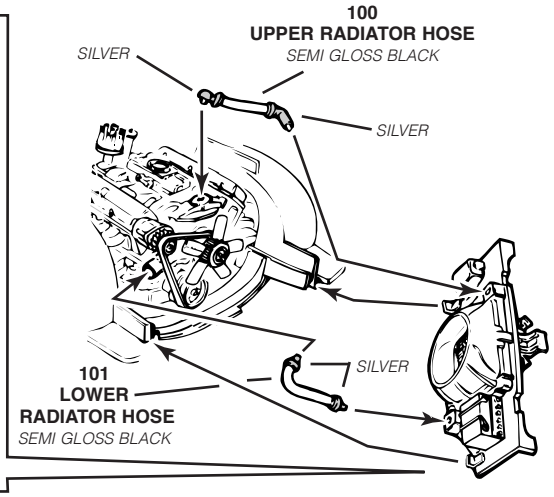

5 EXHAUST AND REAR SUSPENSION ASSEMBLY

A

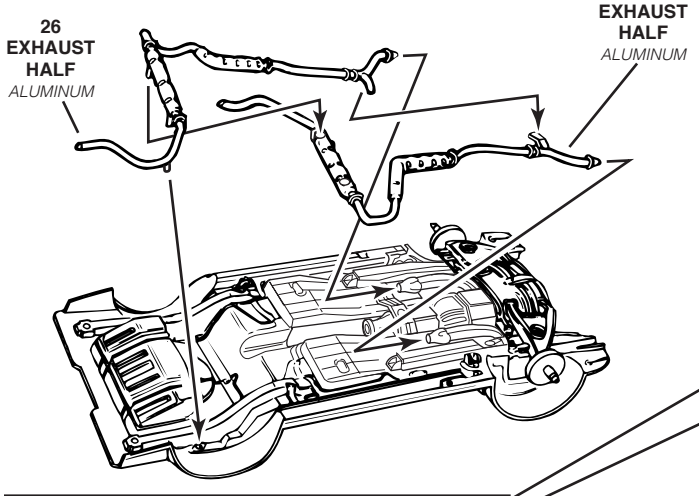

B

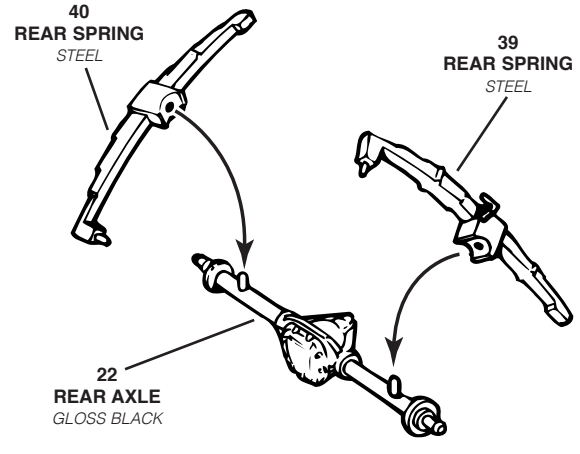

C

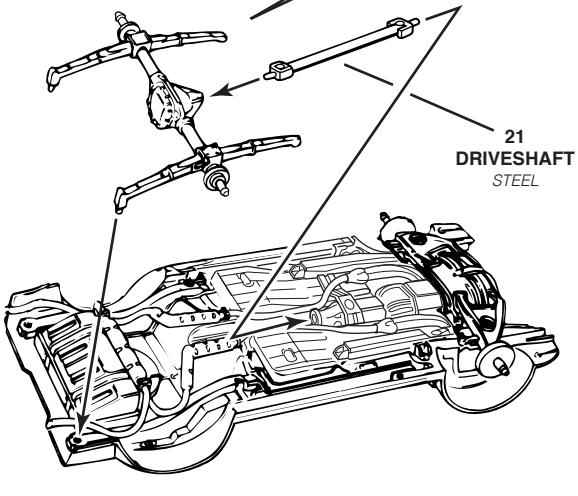

D

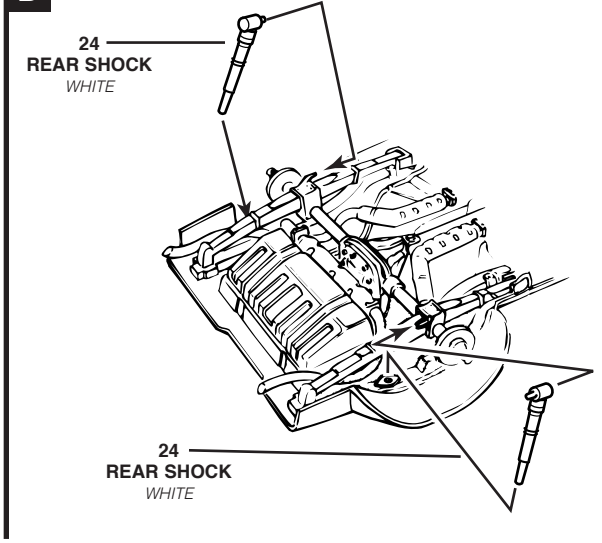

6 WHEEL ASSEMBLY

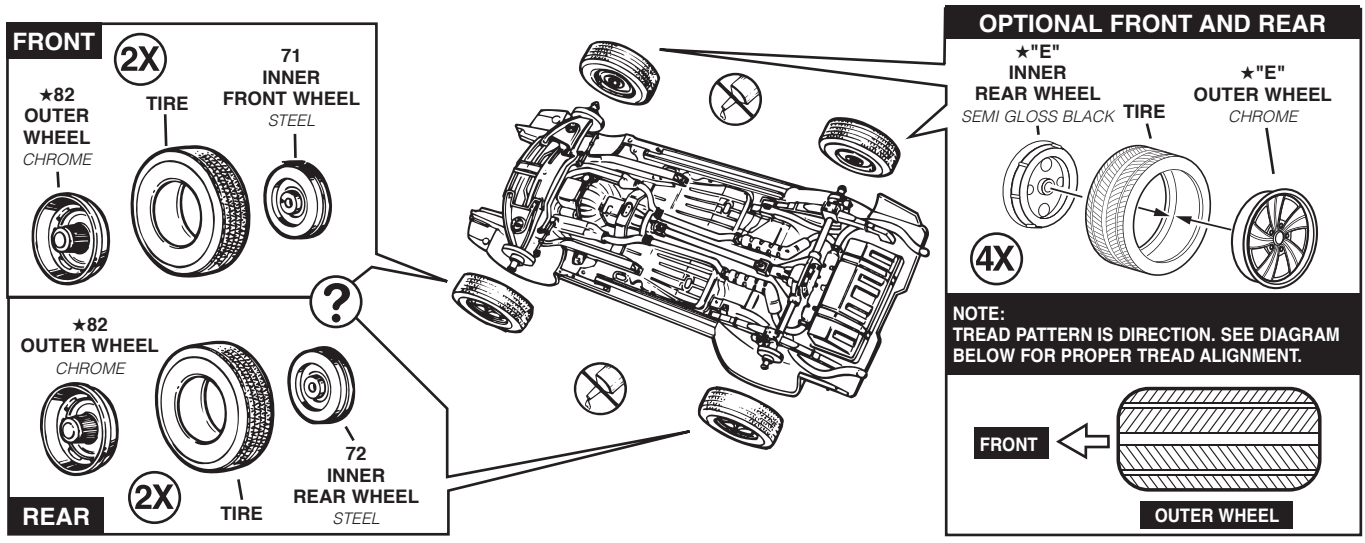

7 WINDOW AND TAIL LIGHT ASSEMBLY

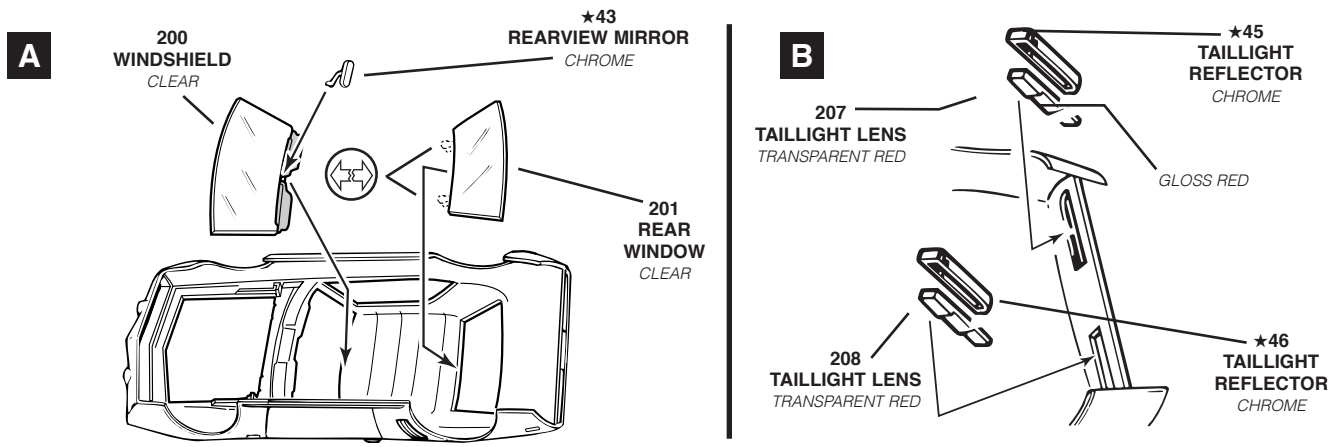

8 INTERIOR ASSEMBLY

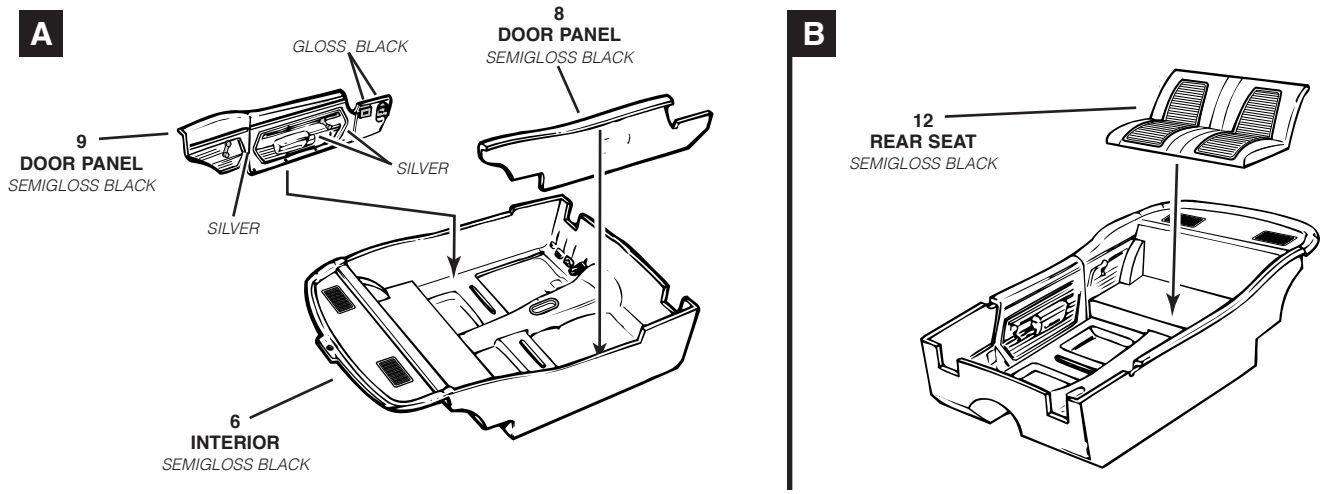

8 INTERIOR ASSEMBLY *CONTINUED*

D

BB
DECAL

AA
DECAL

★50
SHIFT LEVER
CHROME

SEMIGLOSS BLACK

106
CONSOLE
SEMIGLOSS BLACK

WOOD GRAIN

C

10
SEAT HALF
SEMIGLOSS BLACK

11
SEAT HALF
SEMIGLOSS BLACK

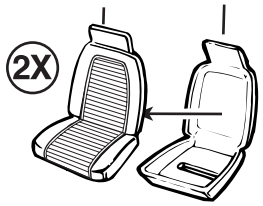

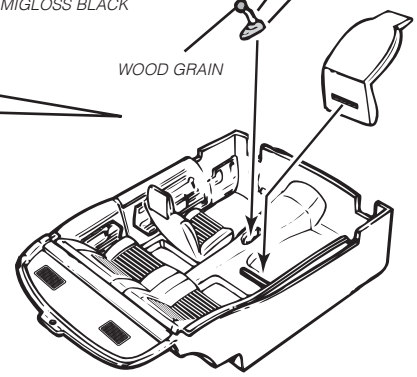

E

13
STEERING
COLUMN
GLOSS BLACK

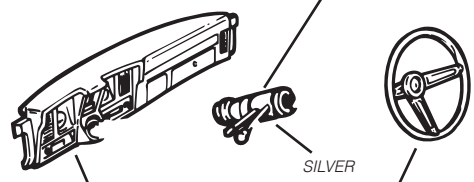

SILVER

7
DASHBOARD
SEMIGLOSS BLACK

81
STEERING
WHEEL
WOOD GRAIN

PAINT NOTE:
BLACK PANEL-
SILVER DETAILS

F

DASHBOARD
TO INTERIOR

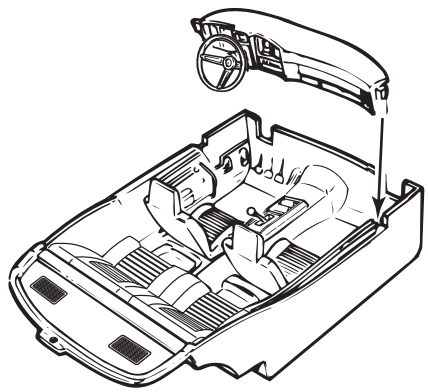

G

INTERIOR TO
BODY

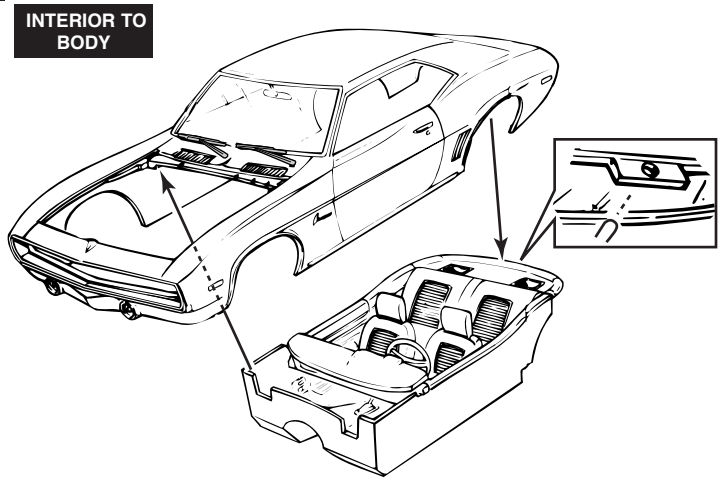

9 FIREWALL AND GRILLE ASSEMBLY

A

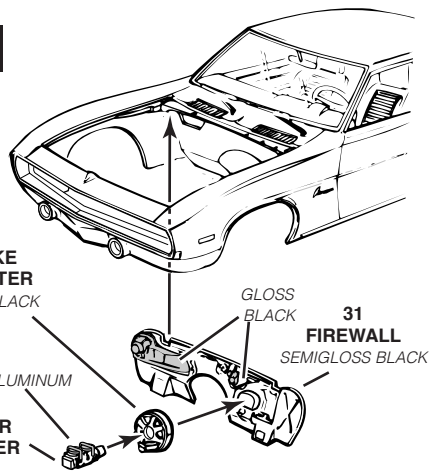

32
BRAKE
BOOSTER
GLOSS BLACK

GLOSS BLACK

31
FIREWALL
SEMIGLOSS BLACK

ALUMINUM

33
MASTER
CYLINDER
STEEL

B

SC VERSION

203
PARKING LIGHT
LENS
CLEAR
(TURN SIGNAL AMBER)

202
HEADLIGHT
LENSE
CLEAR

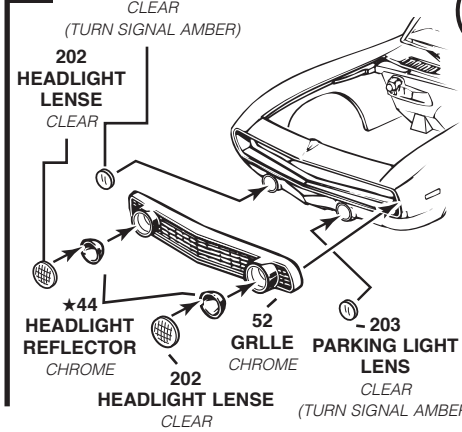

★44
HEADLIGHT
REFLECTOR
CHROME

202
HEADLIGHT LENSE
CLEAR

52
GRLLE
CHROME

203
PARKING LIGHT
LENS
CLEAR
(TURN SIGNAL AMBER)

RS VERSION

203
PARKING LIGHT
LENS
CLEAR
(TURN SIGNAL AMBER)

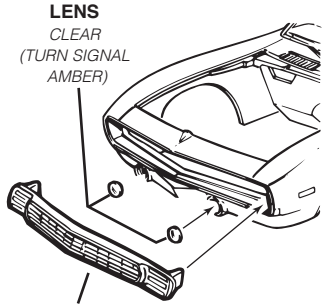

★111
GRILLE
CHROME

BLACK PANEL-
SILVER DETAILS

10 DETAIL ASSEMBLY

A

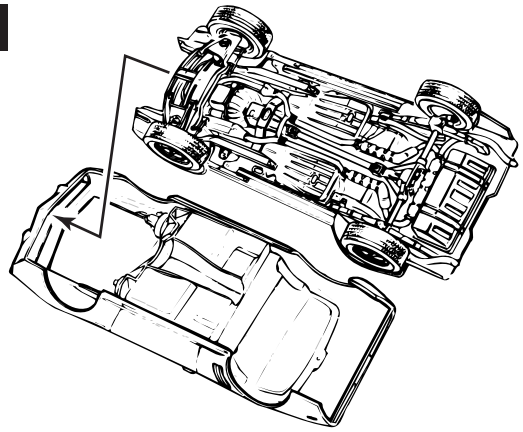

B

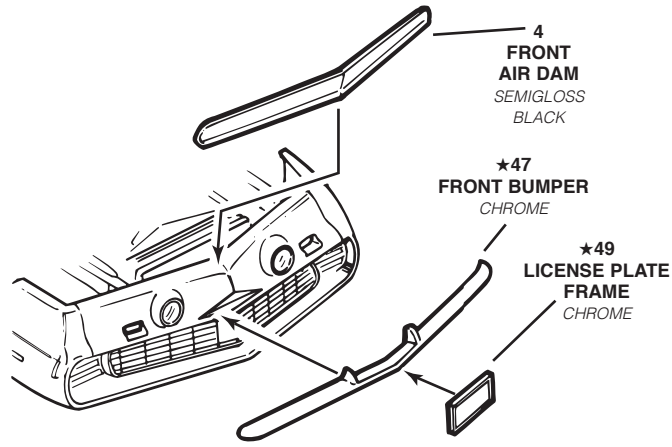

C

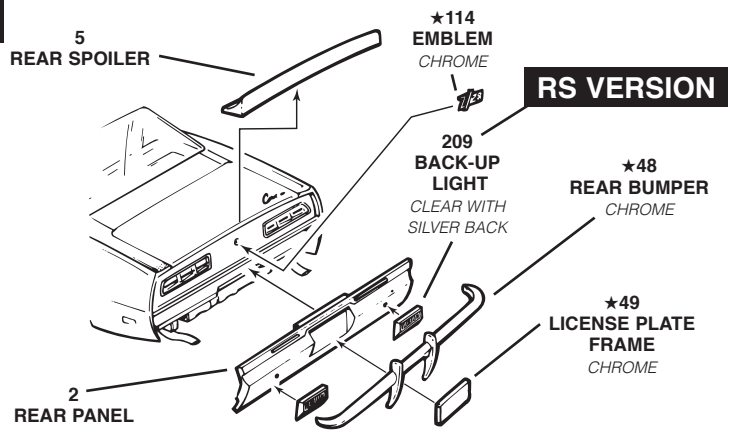

D

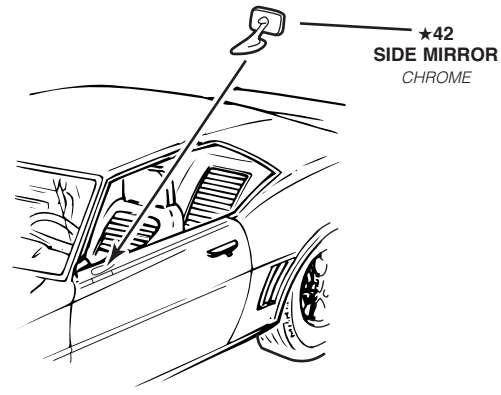

11 FINAL ASSEMBLY

A

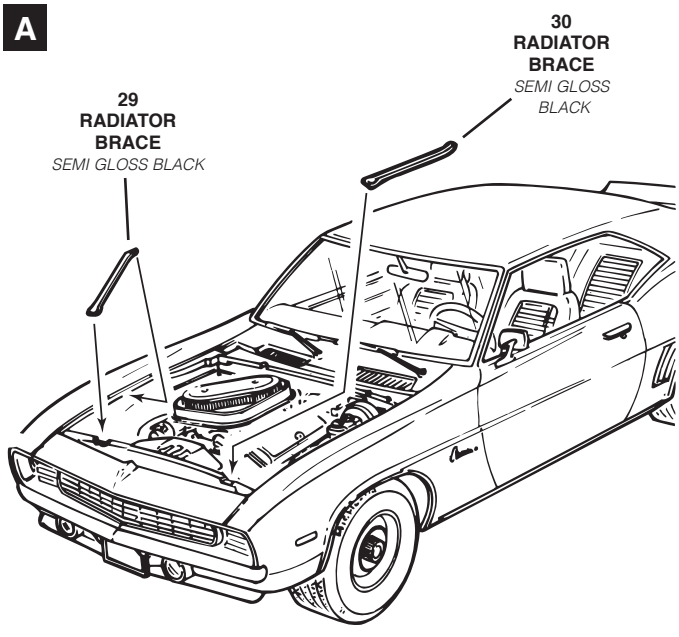

B

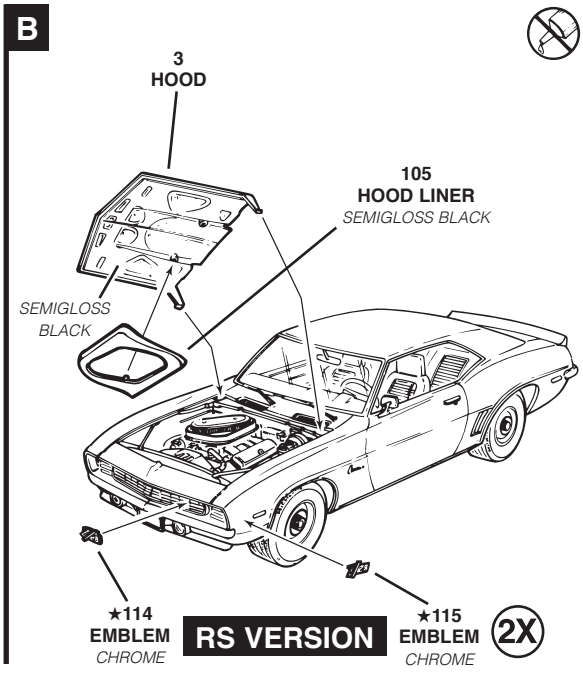
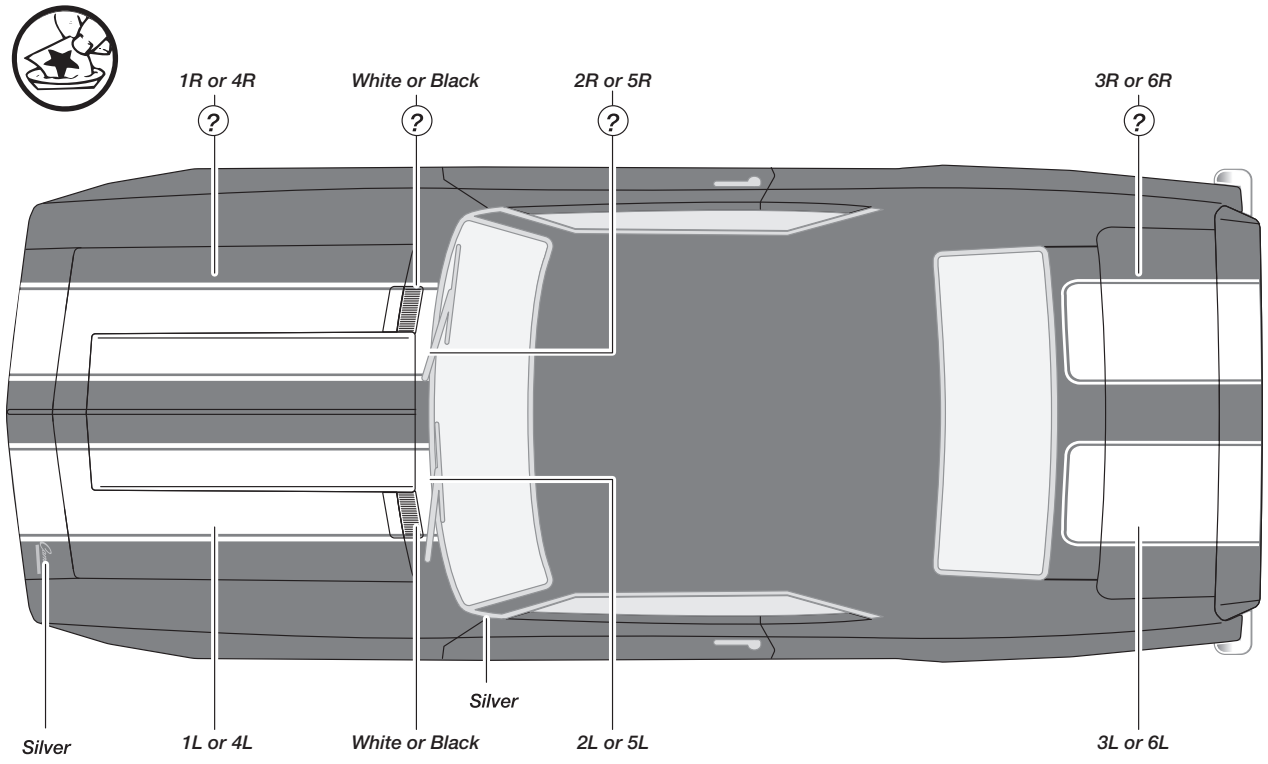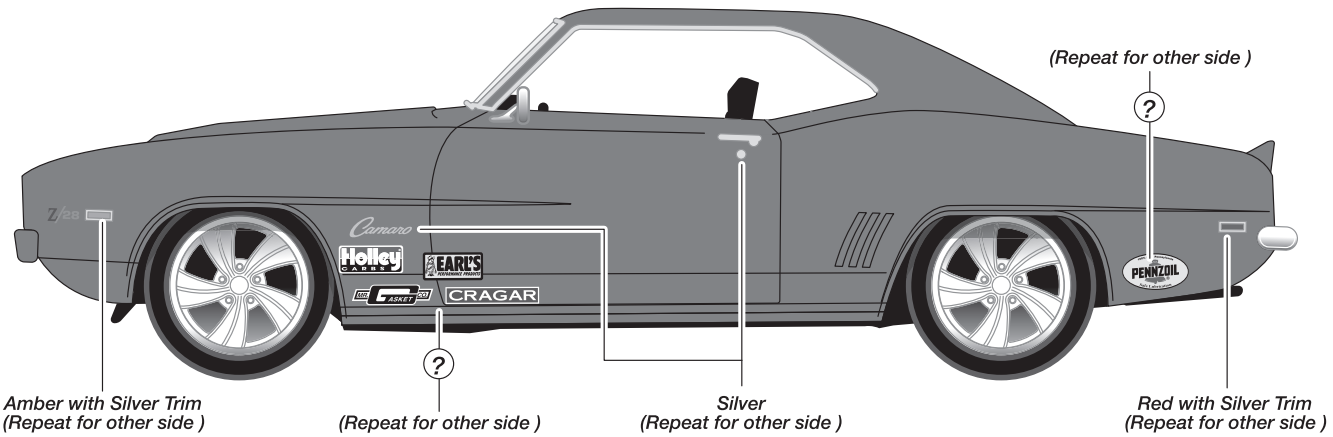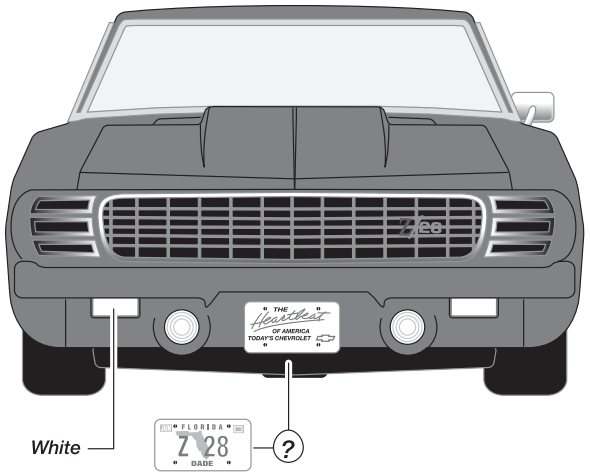
12 DECAL PLACEMENT