KIT 2032

85203200200

Stone, Woods & Cook '41 Willys Gasser

Far and away, among the most recognizable cars in professional drag racing in the 1960's was the '41 Willys® campaigned by Fred Stone, Tim Woods and Doug "Cookie" Cook. Sometimes also known as the "Swindler", the series of Willys gassers that the team ran during the '60's were well-built and tough to beat on race day.

Their first car was powered by an injected 394 Olds® engine when it was introduced at the 1961 Winternationals where it won the B/GS class with an 11.22 second 126 mph run. Later, a new, lighter weight car was built for the A/GS class with a frame fabricated from square tubing and featuring a fiberglass body. They ran the Olds motor until 1964, when the mighty Chrysler® Hemi® engines were retrofitted.

The Stone, Woods & Cook Willys had that traditional gasser look. The straight front axle kept the nose up in the air-better for the weight transfer to get all that engine power to the huge rear slicks-and the S, W, & C series of Willys were the first gassers to break the 10 second elapsed time barrier on the drag strips. Later they broke into the nines and were the first gasser to break 150 miles per hour as well. In some ways, the Willys of Stone, Woods & Cook, Big John Mazmanian and others were the forerunners of Funny Cars both in performance and in their ability to please the spectators. During the gassers' heyday of the 1960's, long before large dollar support from sponsors, the team challenged the other major gasser teams through the weekly drag racing newspapers or the monthly magazines.

The promise of a match race between the Stone, Woods & Cook team and the Mazmanian team would usually fill the stands, and the promoters knew that. For the 1965 season, "just for a change" according to Doug Cook, the team's engine builder and driver, the trademark blue pearl paint was repainted black and it turned out to be a good omen as they won nearly every race they entered that year. Study the instructions carefully and take your time, for when you're finished you'll have a faithful replica of one of the most famous cars to tear down the strip-the Stone, Woods & Cook '41 Willys.

2X	?		!			
*** REPEAT SEVERAL TIMES**	*** OPTIONAL PARTS**	*** DECAL**	*** ALTERNATIVE ASSEMBLY**	*** CEMENT TOGETHER**	*** REMOVE AND THROW AWAY**	*** DO NOT CEMENT**
** A REPETER PLUSIEURS FOIS*	** PIECES EN OPTION*	** DECAL COMANIE*	** ENSEMBLAGE ALTERNATIVE*	** A COLLER*	** A RETIRER ET JETER*	** NE PAS COLLER*

READ THIS BEFORE YOU BEGIN

* Study the assembly drawings.
* Each plastic part is identified by a number.
* In the assembly drawings, some parts will be marked by a star (★) to indicate chrome plated plastic.
* For better paint and decal adhesion, wash the plastic parts in a mild detergent solution. Rinse and let air dry.
* Check the fit of each piece before cementing in place.
* Use only cement for polystyrene plastic.
* Scrape plating and paint from areas to be cemented.
* Allow paint to dry thoroughly before handling parts.
* Any unused parts may be discarded.

DECAL APPLICATION INSTRUCTIONS

1. Cut desired decal from sheet.
2. Dip decal in water for a few seconds.
3. Place wet decal on paper towel.
4. Wait until decal is movable on paper backing.
5. Place decal in position on model, face up and slide backing away.
6. Press out air bubbles with a soft damp cloth.
7. Milkiness that may appear is for better decal adhesion and will dry clear. Wipe away any excess adhesive.
8. Do not touch decal until fully dry.
9. Allow the decals 48 hours to dry before applying clear coat.

NOTE: Decals are compatible with setting solutions or solvents.

LIRE CE QUI SUIT AVANT DE COMMENCER

* Etudier les schémas de montage.
* Chaque pièce en plastique est identifiée par un numéro.
* Sur les schémas de montage, certaines pièces sont mar quées d'une étoile (★) pour indiquer qu'elles sont en plastique chromé.
* Pour une meilleure prise de la peinture et des autocollants, laver les pièces en plastique avec une solution détergente peu concentrée. Les rincer et les laisser sécher à l'air.
* Vérifier que chaque pièce s'ajuste bien avant de la coller en place.
* N'utiliser que de la colle pour polystyrène.
* Gratter les parties à coller pour enlever le chrome et la peinture.
* Laisser la peinture bien sécher avant de manipuler les pièces.
* Toute pièce inutilisée peut être jetée.

DIRECTIVES D'APPLICATION DES AUTOCOLLANTS

1. Découper l'autocollant désiré de la feuille.
2. Tremper l'autocollant dans de l'eau pendant quelques secondes.
3. Placer l'autocollant mouillé sur une serviette en papier.
4. Attendez que l'autocollant puisse être déplacé sur son sup port en papier.
5. Mettre l'autocollant en position sur le modèle face sur le dessus et faire glisser le support pour l'enlever.
6. Appuyer avec un chiffon doux humide pour éliminer les bulles d'air.
7. La substance laiteuse qui peut apparaître est destinée à améliorer l'adhésion de l'autocollant et devient incolore au séchage. Essuyer pour enlever tout excédent d'adhésif.
8. Ne pas toucher l'autocollant tant qu'il n'est pas bien sec.
9. Laisser l'autocollant sécher pendant 48 heures avant d'appliquer une couche transparente.

This paint guide is provided to complete this kit as shown on the box.

Ce guide de peinture est fourni pour reproduire le modèle réduit qui apparaît sur la boîte.

Aluminum	*Aluminum*
Flat Black	*Noir mat*
Gloss Black	*Noir lustré*
Gloss White	*Blanc lustré*
Gunmetal	*Bronze*
Gloss Red	*Rouge lustré*
Semigloss Black	*Noir satin*
Steel	*Acier*
Tan	*Havane*

If you have any questions or comments, call our hotline at: (800) 833-3570
or, please write to:

Revell-Monogram Consumer Service Department, 725 Landwehr Rd. Northbrook, IL. 60062

Be sure to include the plan number (85203200200), part number, description, your return address and phone number.

Visit our website: www.revell.com

REVELL-MONOGRAM, LLC Morton Grove, IL. Copyright © 2006. All rights reserved. Made in U.S.A.

1 ENGINE ASSEMBLY

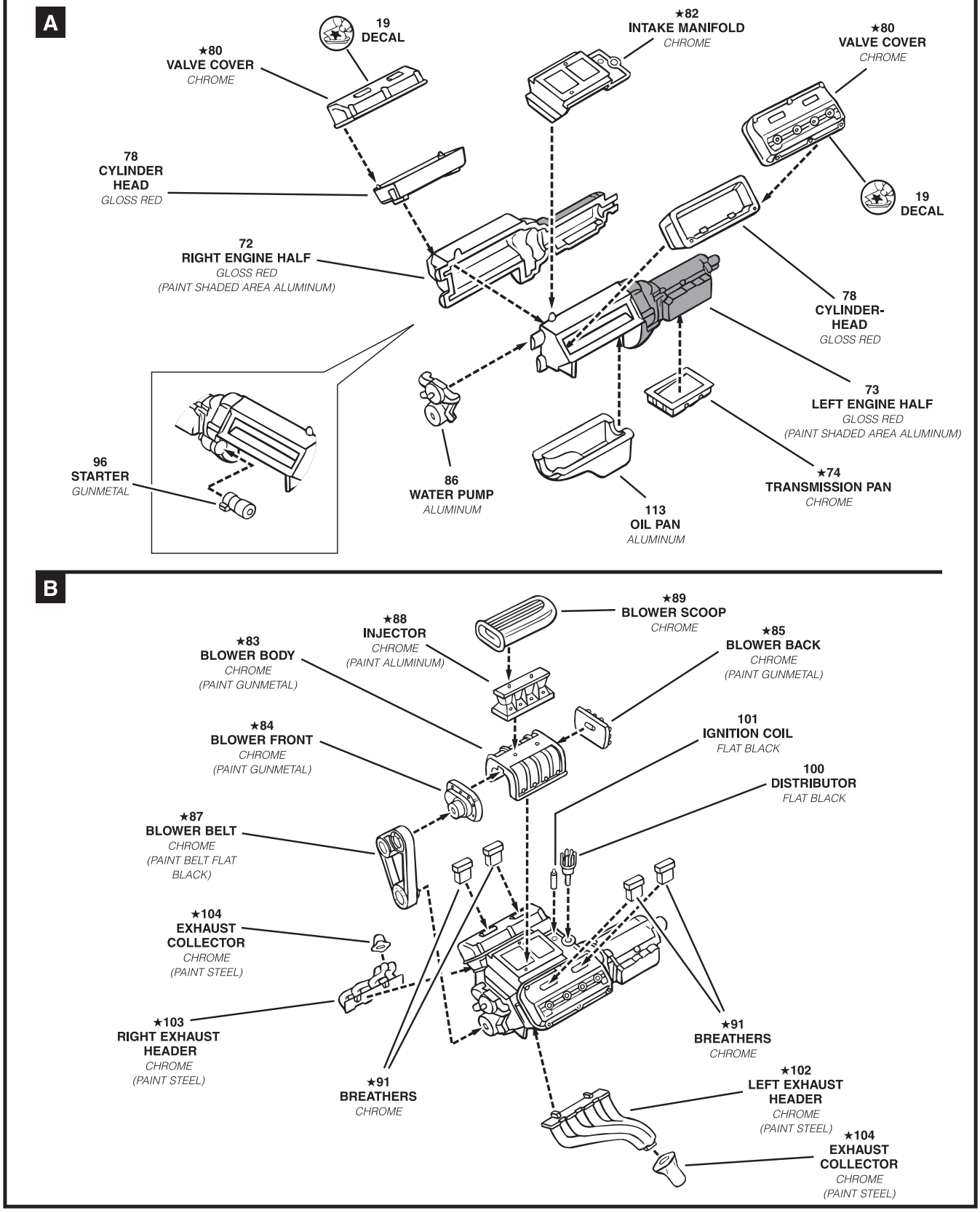

2 INTERIOR ASSEMBLY

A

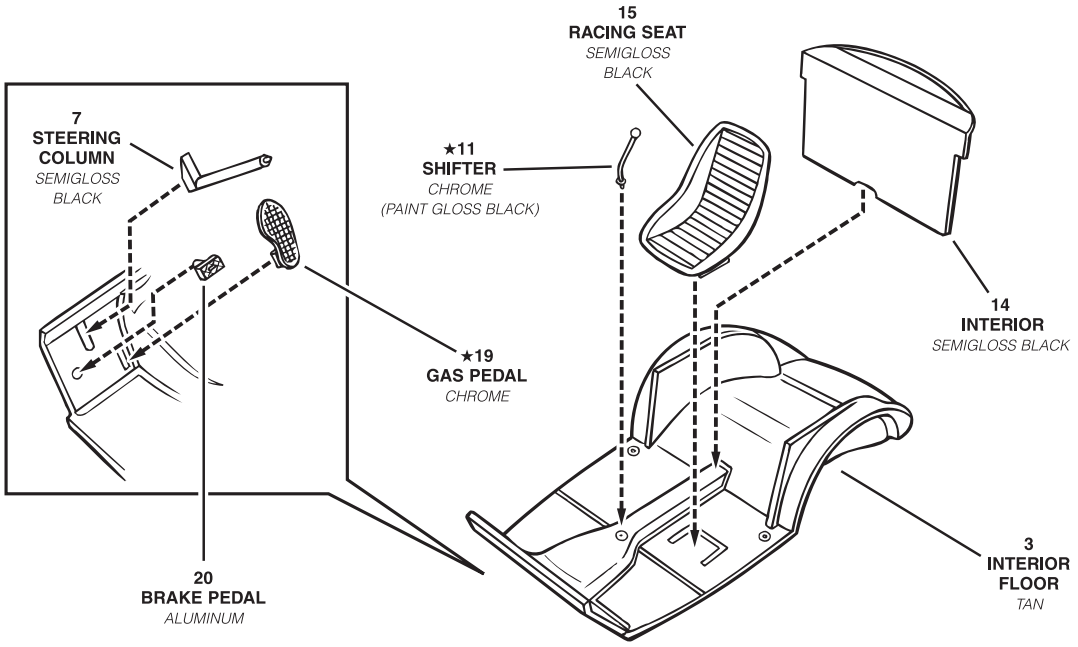

B

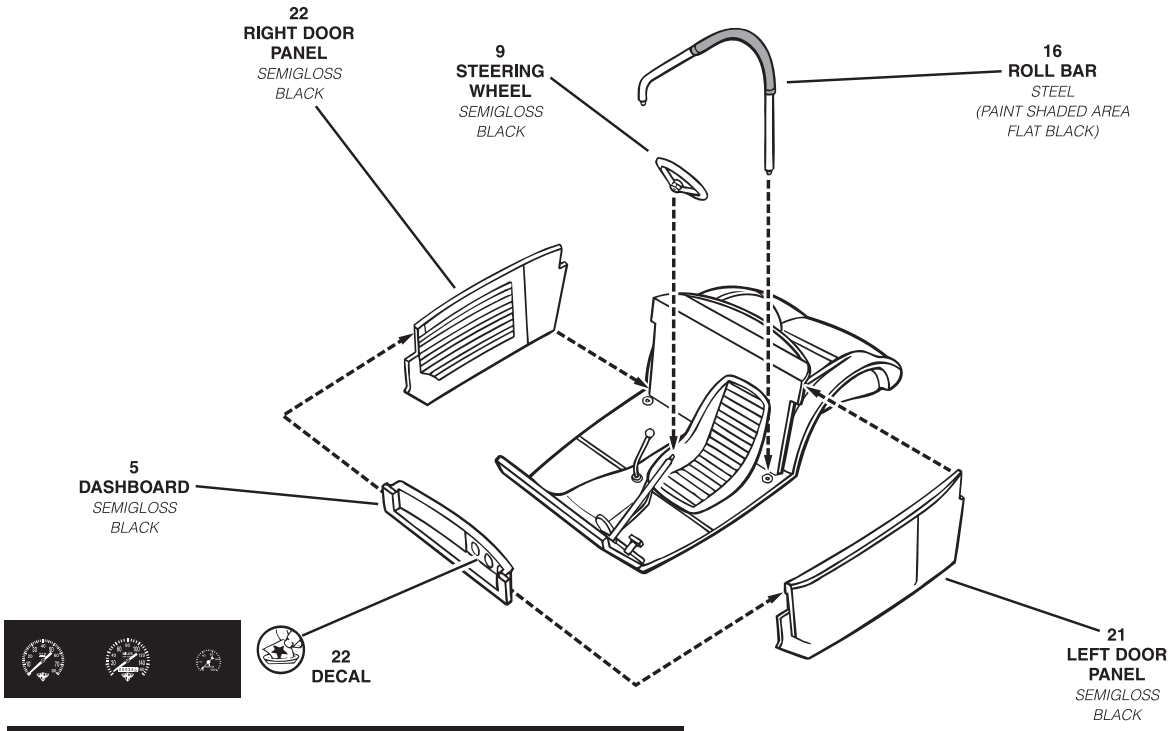

NOTE: DO NOT DIP INTO WATER, CUT OUT DASHBOARD INSTRUMENT TEMPLATE FROM DECAL SHEET AND ATTACH TO REAR OF DASHBOARD USING WHITE GLUE.

3 FRAME ASSEMBLY

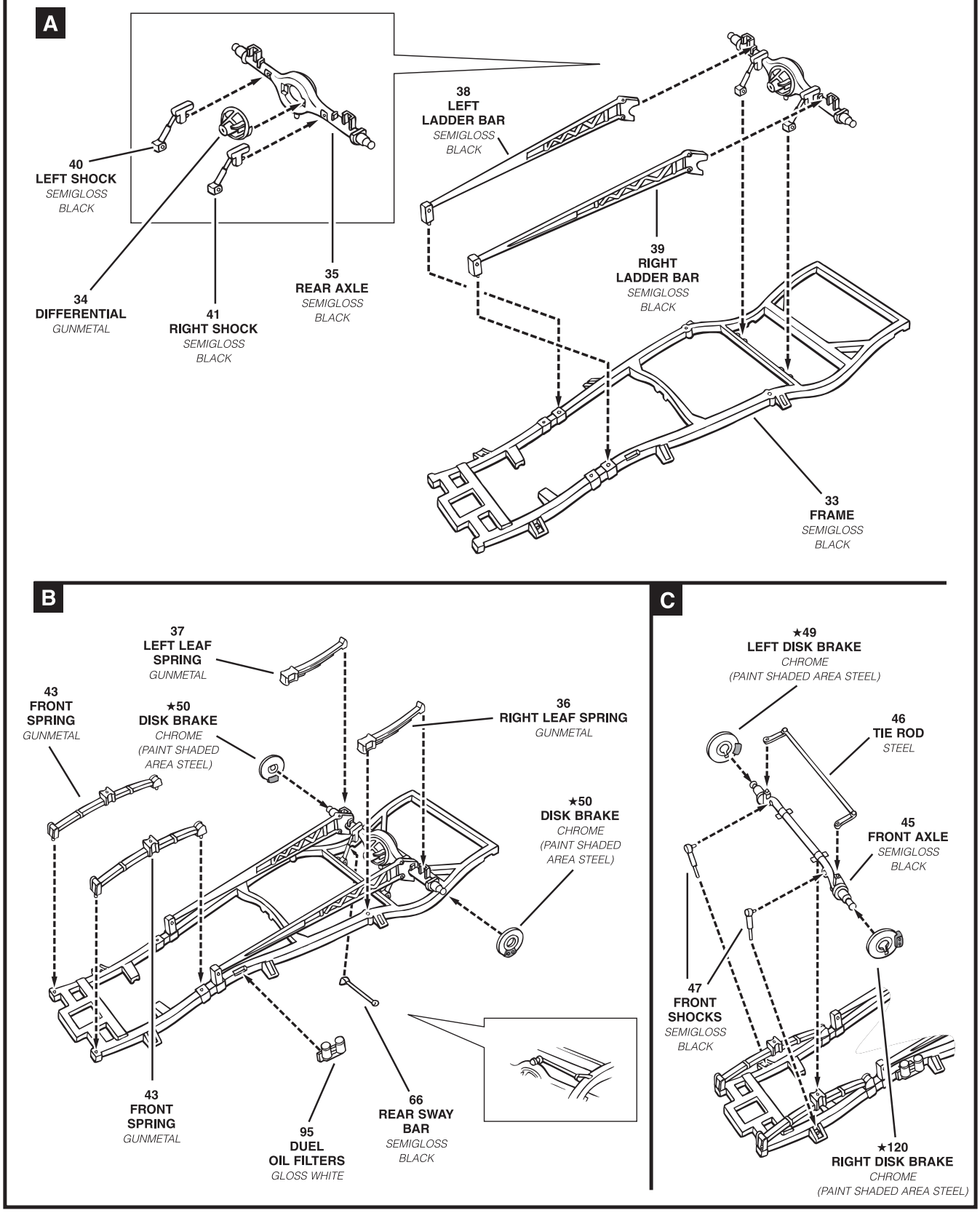

4 WHEEL ASSEMBLY

2X REPEAT FOR OTHER SIDE

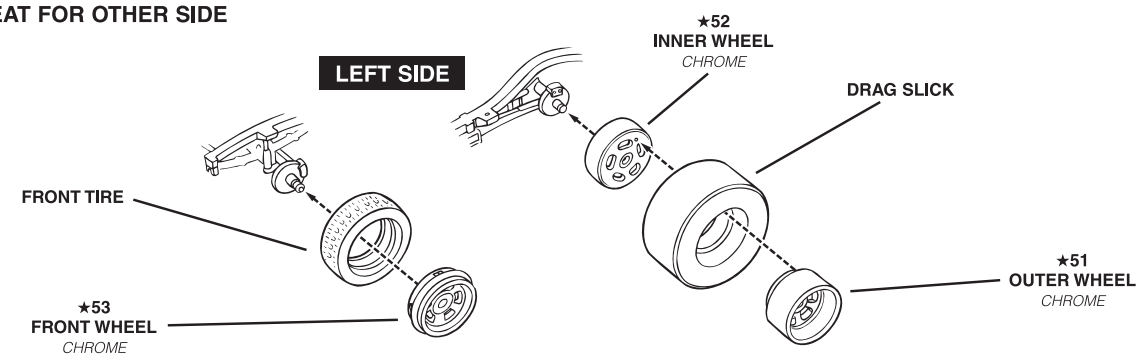

5 DRIVETRAIN ASSEMBLY

A

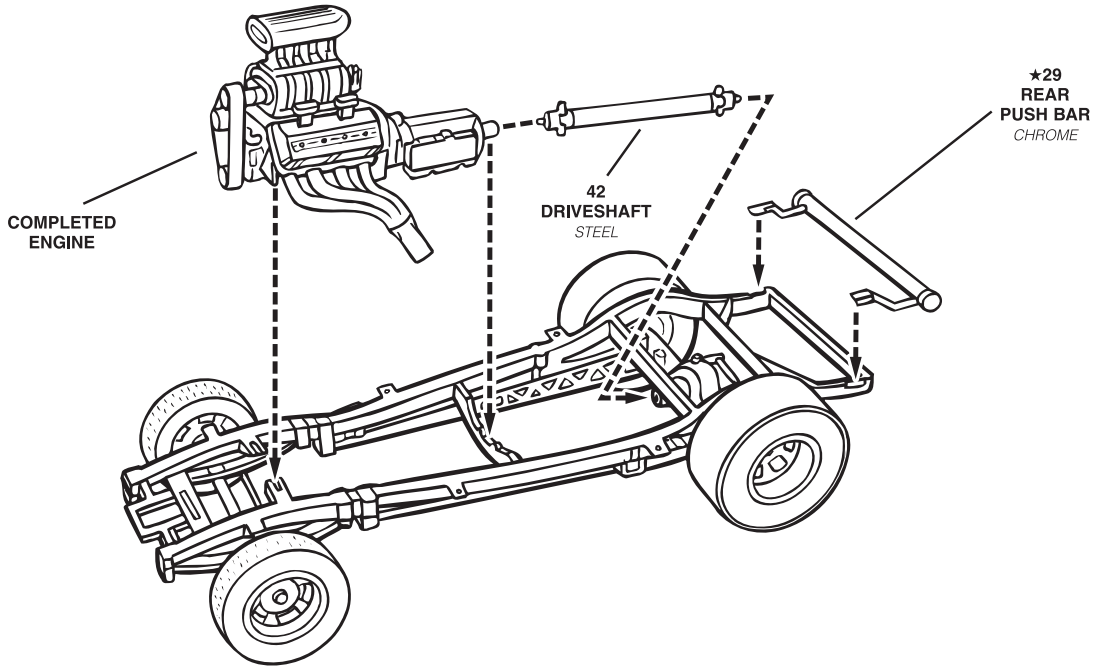

B

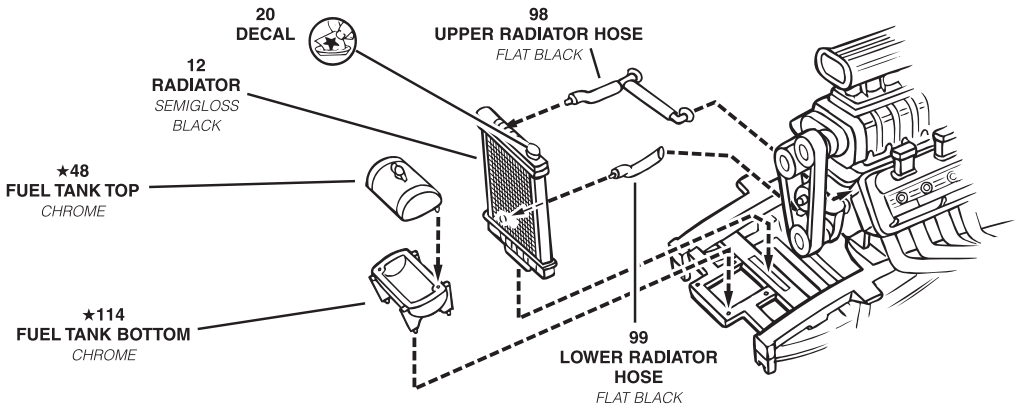

6 BODY ASSEMBLY

A *

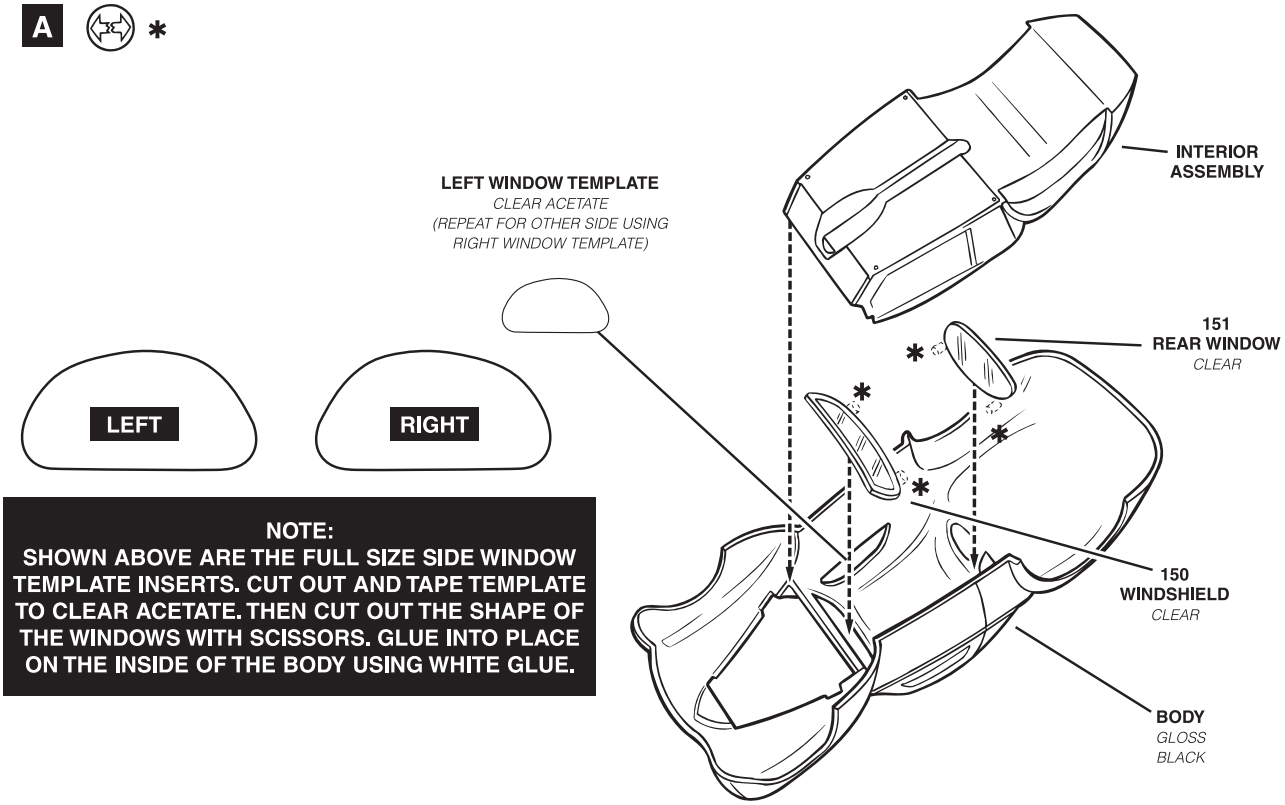

NOTE:
SHOWN ABOVE ARE THE FULL SIZE SIDE WINDOW TEMPLATE INSERTS. CUT OUT AND TAPE TEMPLATE TO CLEAR ACETATE. THEN CUT OUT THE SHAPE OF THE WINDOWS WITH SCISSORS. GLUE INTO PLACE ON THE INSIDE OF THE BODY USING WHITE GLUE.

B

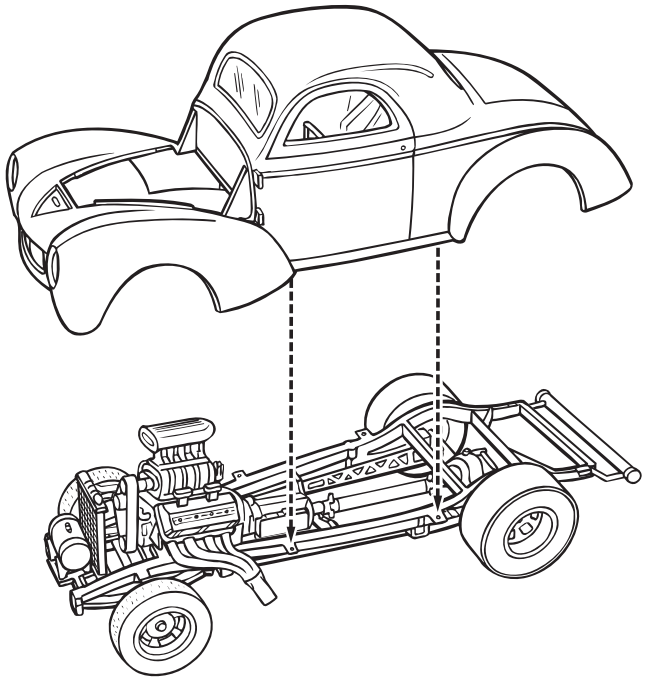

7 FINAL ASSEMBLY

A

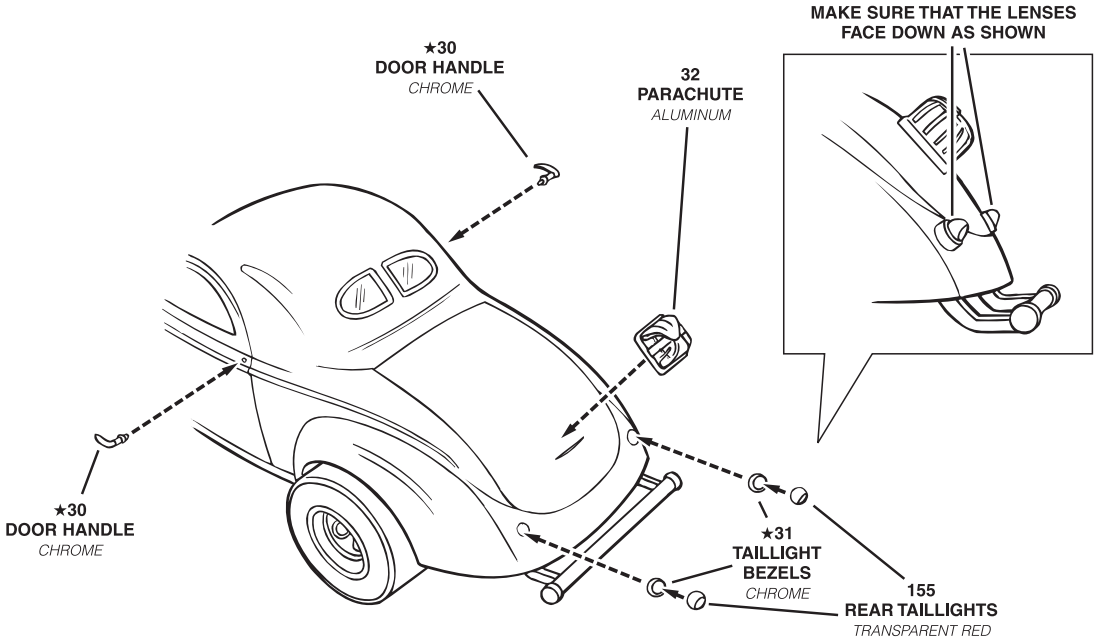

B

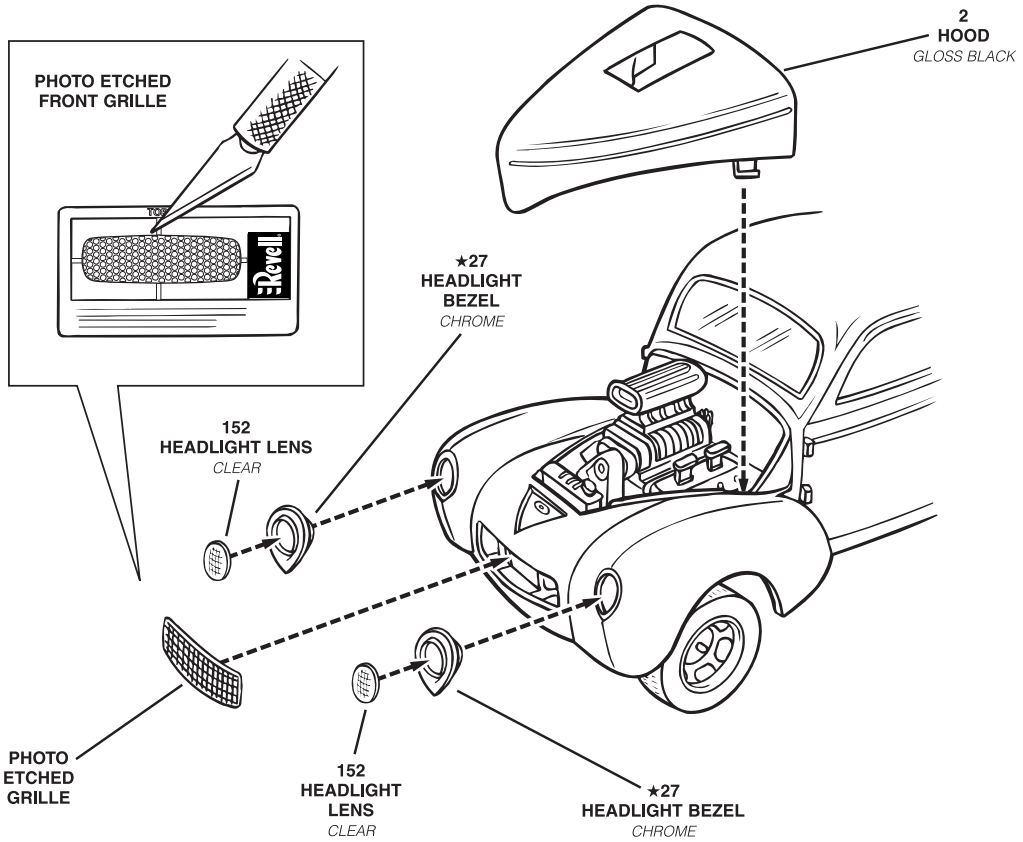

PHOTO ETCHED PARTS NOTE:
This kit contains photo etched parts for added realism. Use a sharp knife to remove the parts from their tree, and cut against a hard surface like a piece of glass. Stick a piece of tape to the back of the photo etch tree so the parts don't fly off and get lost. Carefully sand the photo etch pieces to remove any remnants of their mounting points. To attach the photo etched pieces to your model, use a toothpick or piece of wire to apply a small amount of CA superglue, two-part epoxy, or clear enamel paint to your model. Then the photo etched pieces can be put into place using a tweezers or a toothpick dipped in candle wax.

8 DECAL PLACEMENT

BLUE VERSION

* (REPEAT FOR OTHER SIDE)

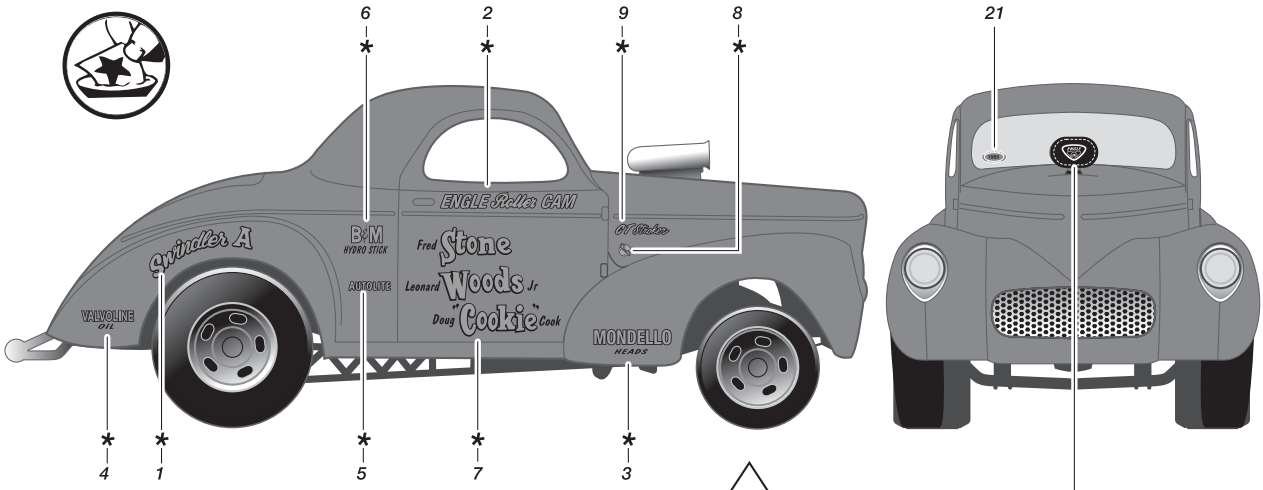

Carefully cut decal from decal sheet and use white glue to glue it to the scoop. (Do not dip in water.)
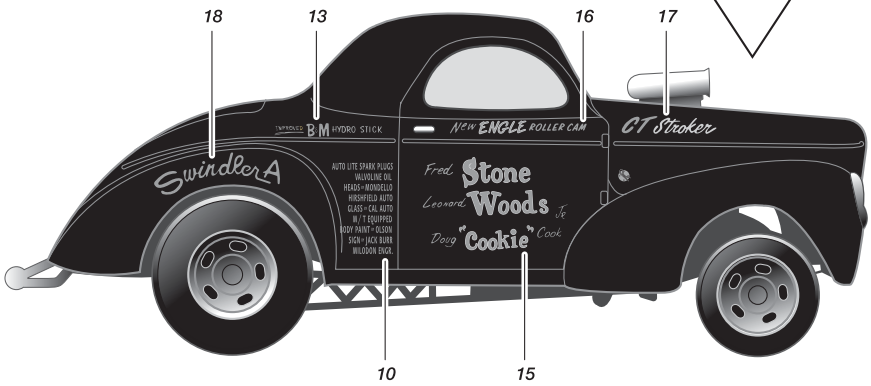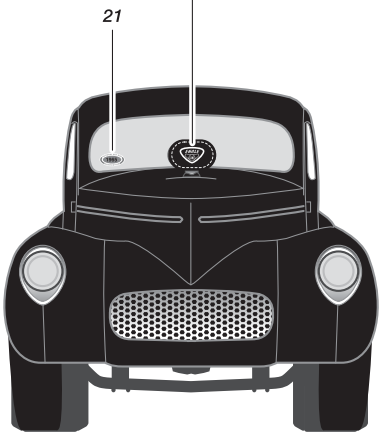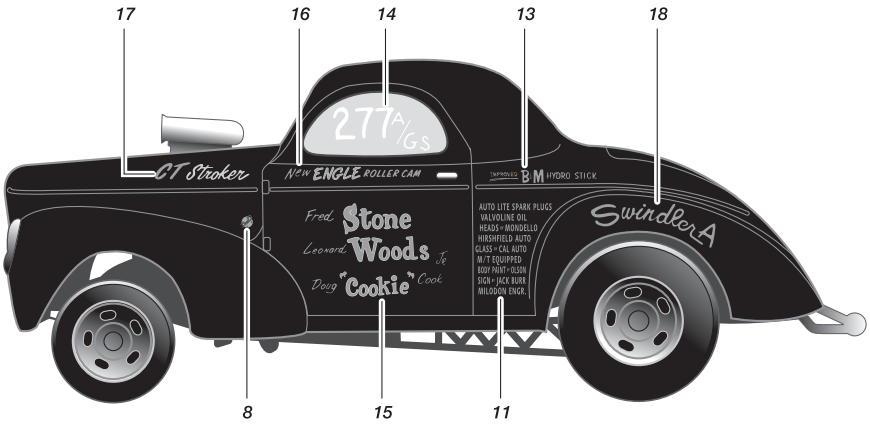
BLACK VERSION