Heli-Max™ PERFORMANCE PARTS

HELI SUPER START

Instructions

Note: The Heli-Max Super Start is recommended for helicopters with a one-way starter shaft.

Operation

1. Turn on the radio system and check for proper operation.

2. Install the glow plug igniter.

3. Insert the starter cone onto the engine start adapter unit and press the starter switch to activate.

Note*: Stop the starter if the engine does not start within 10 seconds or if it becomes more difficult to turn over. If the engine does not start, recheck the needle settings and glow plug or clear out the flooded engine according to the manufacturer's recommendations. Then try starting again.*

4. Once the engine starts, release the starter switch and remove the starter shaft and glow plug igniter.

For technical assistance contact:

Product Support
(217) 398-8970, ext 5
E-mail: productsupport@greatplanes.com

- Heli-Max will warranty the Heli Super Start for 90 days after the purchase date from defects in materials or workmanship. Heli-Max will either repair or replace, at no charge, the incorrectly made part.
- Make sure you save the receipt or invoice you were given when you bought your starter. It is your proof of purchase and we must see it before we can honor the warranty.
- To return your Heli-Max Heli Super Start for repairs covered under warranty you should send it to:

Hobby Services
3002 N. Apollo Drive, Suite 1
Champaign, Illinois 61822
Attn: Service Department
Phone: (217) 398-0007 9:00am-5:00pm Central Time M-F
E-mail:hobbyservices@hobbico.com

REPLACEMENT PARTS

PART	STOCK #	KEY#
Starter Body Set	HMXP2006	**1**
540 Motor	DTXP6037	**2**
Pinion Gear 12T	DTXP6038	**3**
Pinion Set Screw	DTXQ0305	**4**
Wire Harness	HMXP2011	**5**
Main Switch, Rocker	DTXP6066	**6**
Gear, 40T/12T	HMXP2009	**7**
Gear, 40T/Hex	DTXP6039	**8**
Hex Gear Shaft	DTXP6040	**9**
Gear Shaft	HMXP2005	**10**
5x10mm Bearing	DTXC1535	**11**
10x19mm Bearing	DTXC1704	**12**
Start Cone	HMXP2007	**13**
Rubber Insert	HMXP2008	**14**
Secondary Switch, Button	HMXP2010	**15**
3x8 Self-Tapping Screw	DTXQ0207	
3x10 Self-Tapping Screw	DTXQ0207	
3x25 Self-Tapping Screw	DTXQ0211	
3x30 Cap Screw	DTXQ0287	

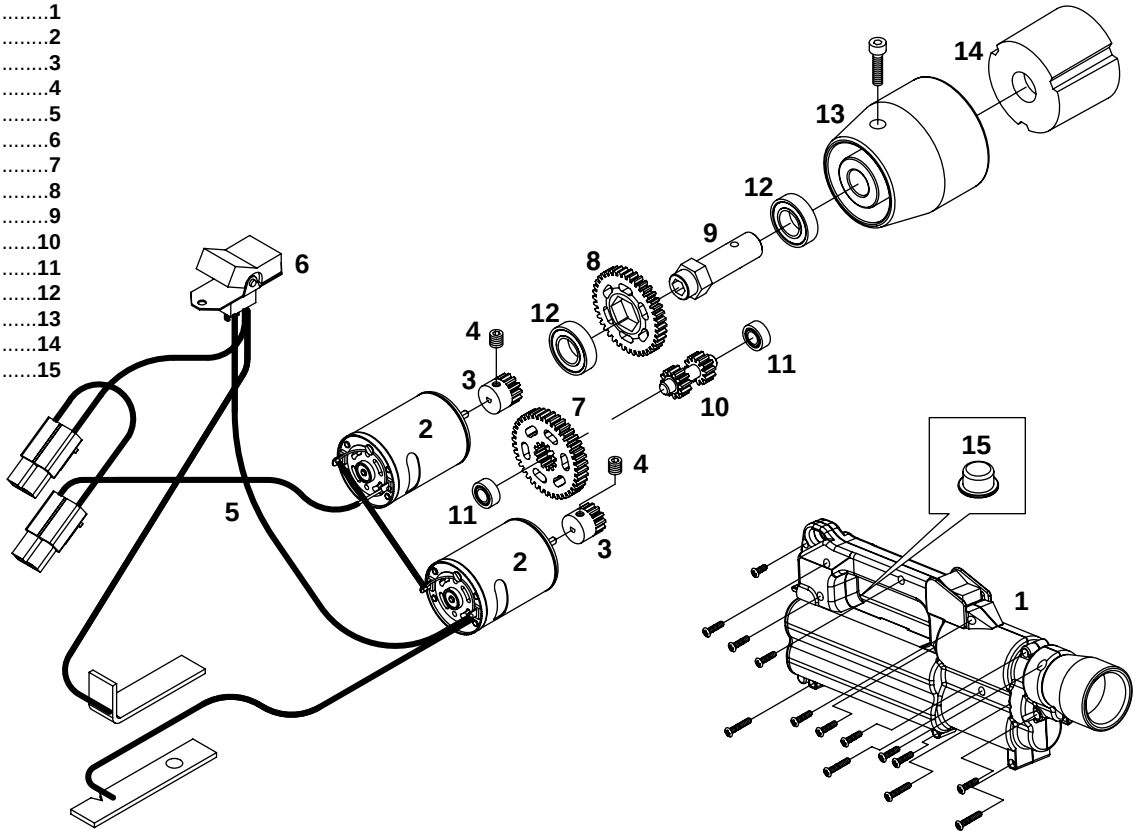

Entire Contents © Copyright 2005