INSTRUCTION MANUAL
AX90032-1001

YETI XL™

READY-TO-RUN MONSTER BUGGY

1/8th SCALE ELECTRIC 4WD • BRUSHLESS • WATERPROOF

axial®

www.axialracing.com

CAUTIONS

To prevent serious personal injury and/or property damage, operate all remotely controlled models in a responsible manner as outlined herein.

CHOOSE THE RIGHT PLACE TO OPERATE YOUR R/C MODEL.

- Do not run on public streets or highways. This could cause serious accidents, personal injuries, and/or property damage.
- Never run R/C models near people or animals.
- To avoid injury, do not run in confined spaces.
- Do not run where loud noises can disturb others, such as hospitals and residential areas.
- Never run indoors. There is a high risk of fire and/or damage.

INSPECT YOUR MODEL BEFORE OPERATION.

- Make sure that all screws and nuts are properly tightened. It is also a good idea to use removable thread lock wherever metal screws go into metal, especially for engine mounts and the engine pilot shaft.
- Always use fresh batteries for your transmitter and for your receiver to avoid losing control of the model.
- Always test the brakes and throttle before starting your engine to avoid losing control of the model.

AFTER OPERATION OF YOUR R/C MODEL

- Turn off receiver first, then turn off transmitter, this will prevent runaways.
- Be careful when handling batteries, they will be hot after running.
- Replace any batteries that have been dented or have frayed wires, short circuits can cause fire.
- Be sure to keep your R/C model clean and free of excess dirt and grease, this will increase the life.

VORSICHT!

Um Verletzungen an Personen und/oder Sachschäden zu vermeiden, sollten alle ferngesteuerten Modelle sorgfältig und verantwortungsbewusst bedient werden,wie nachfolgend beschrieben.

Wählen Sie den richtigen Platz zum Fahren

- Fahren Sie niemals auf öffentlichen Straßen. Dies könnte Verkehrsunfälle, Personen schäden oder Sachschäden verursachen.
- Fahren Sie niemals in der Nähe von anderen Personen oder Tieren.
- Fahren Sie niemals auf belebten Straßen.
- Fahren Sie nie in der Nähe von Wohnhäusern oder Krankenhäusern. Der Lärm könnte andere Personen stören.
- Fahren Sie niemals in Innenräumen. Dort könnte etwas beschädigt werden.

Überprüfen Sie Ihr Modell, bevor Sie es in Betrieb nehmen.

- Gehen Sie sicher, dass alle Schrauben und Muttern festgezogen sind. Verwenden Sie überall dort Schrauben-Sicherungslack, wo Metallschrauben in ein Metallgewinde greifen, besonders bei den Motorhaltern.
- Um Störungen zu vermeiden, benutzen Sie immer voll geladene Akkus in Ihrem Sender und Empfänger.
- Bevor Sie den Motor starten, sollten Sie immer die Funktion der Bremse und des Gashebels testen.

Nach Betrieb des RC Modells:

- Zuerst den Empfänger abdrehen, dann den Sender abdrehen um unkontrolliertes Durchgehen zu vermeiden.
- Seien Sie vorsichtig mit gebrauchten Akkus, sie können nach dem Gebrauch heiß sein.
- Ersetzten Sie Akkus/Batterien die beschädigt sind oder schadhafte Kabel aufweisen, sie können Kurzschlüsse oder Feuer verursachen.
- Halten Sie Ihr Fahrzeug sauber und entfernen Sie Schmutz und Schmierfett, damit erhöhen Sie die Lebensdauer Ihres Modells.

PRECAUTIONS

Afin d'éviter toutes blessures corporelles et/ou dommages environnants, veuillez procéder en toute responsabilité comme indiqué ci-dessous

Choisir le lieu adéquat pour faire rouler votre modèle.

- Ne jamais rouler dans les rues ou sur les routes ouvertes au publique. Ceci peut provoquer de graves accidents.
- Ne jamais rouler près de personnes ou d'animaux.
- Pour éviter les blessures, ne pas rouler dans des espaces confinés.
- Ne jamais rouler où le bruit peut déranger, comme aux abords des hôpitaux ou des quartiersrésidentiels.
- Ne jamais rouler à l'intérieur: les gaz d'échappement sont nocifs.

Controler votre modèle avant chaque utilisation.

- Vérifier que les vis et les écrour sont bien serrés. Il est trés fortement conseillé d'utiliser du frein filet pour bloquer les vis qui sont en contact avec du métal et tout particulierer ment les vis du moteur.
- Toujours utiliser des batteries bien chargées pour l'émission et la réception.
- Toujours vérifier les freins et la commande des gaz avant de démarrer.

Après l'Opération De Votre Modèle de R/C

- Le virage du récepteur premier, alors virage de l'émetteur, ceci empêchera des fugitifs.
- Faire attention en contrôlant des piles, ils auront chaud après avoir couru.
- Remplacer n'importe quelles piles qui ont été cabossées ou a éraillé des fils, les court-circuits peuvent causer le feu.
- Etre sûr de garder votre modèle de R/C nettoie et libère de terre et la graisse supplémen taires, ceci augmentera la vie.

Included items / Im Baukasten enthalten / Outils inclus dans le kit

Radio control car
Ferngesteuertes Modellauto
Voiture radio-commandée

2.4GHz
Transmitter
Sender
Emetteur

Parts Bag
Kleinteilebeutel
Sachet de pièces détachées

Cross wrench
Steckschlüssel
Clé à tube

Equipment needed / Benötigtes Zubehör / Equipement nécessaire

x4

4 AA Alkaline Dry Batteries.
4 St. AA Trockenbatterien.
4 piles type R6 pour votre radio commande.

x2
7.4v 5000mah
or
x2
11.1v 5000mah

Battery
Akku-Pack
Pack de batterie

Charger
Ladegerät
Chargeur

Tools Recommended / Benötigte Werkzeuge / Outillage

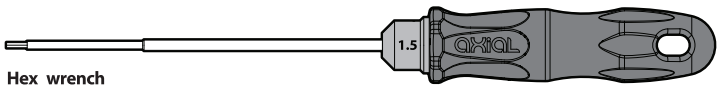

Hex wrench
Inbusschlüssel
Clé Allen

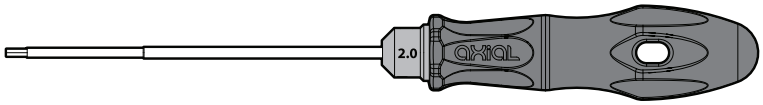

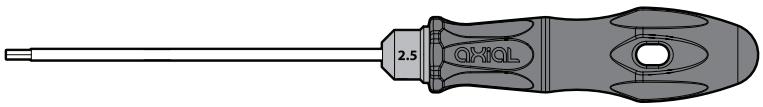

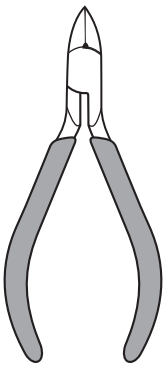

Side cutter
Seitenschneider
Pinces coupantes

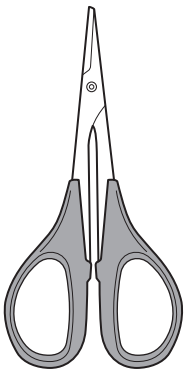

Curved scissors
Schere
Ciseaux

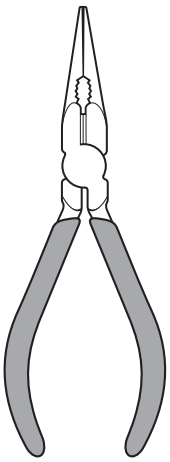

Long nose pliers
Flachzange
Pinces à becs longs

Modeling knife
Modelliermesser
Couteau de modéliste

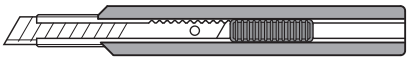

Top View Parts

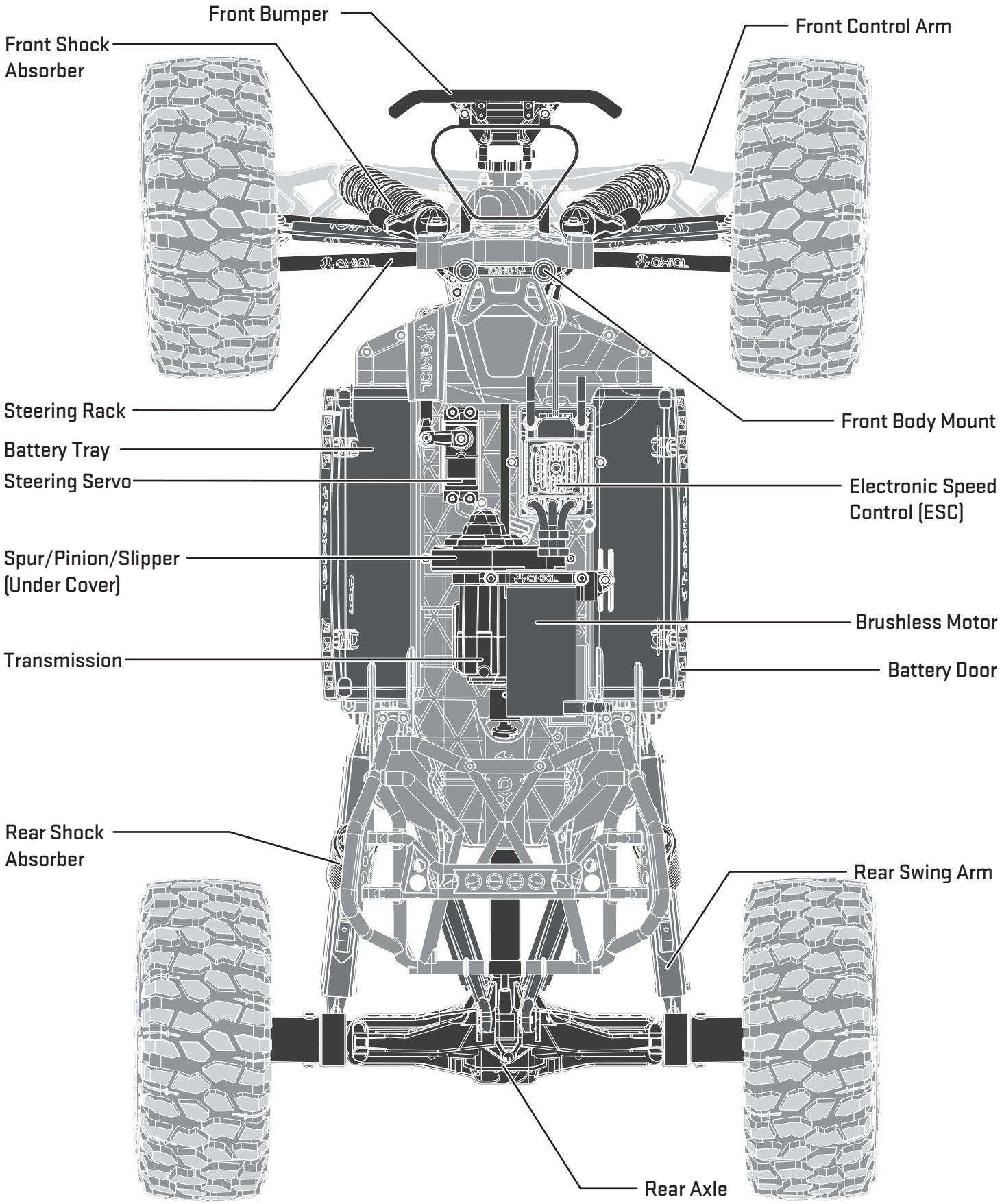

Getting-Started Checklist

The following checklist is a guide for getting you vehicle running for the first time.

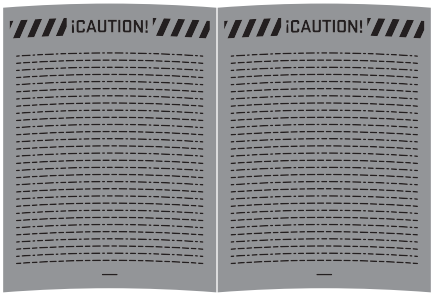

☐ Read 'Cautions' in Manual.

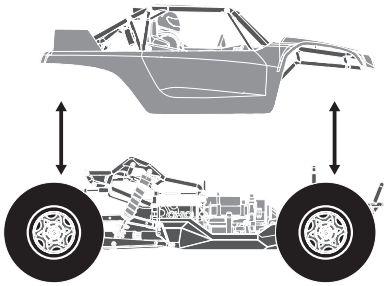

☐ Familiarize yourself with vehicle and its components.

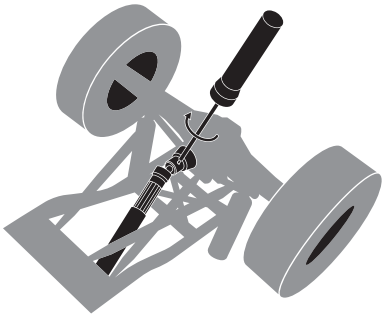

☐ Even though the vehicle is new check driveshaft setscrews and other screws to make sure they are tight from the factory.

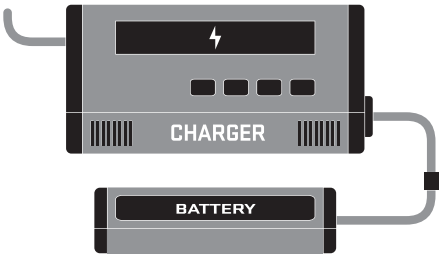

☐ Charge battery pack.

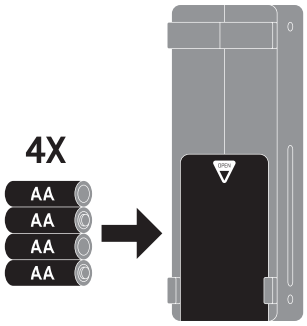

☐ Install 4X AA batteries into Transmitter.

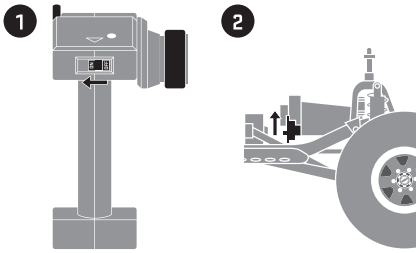

☐ Turn on transmitter FIRST

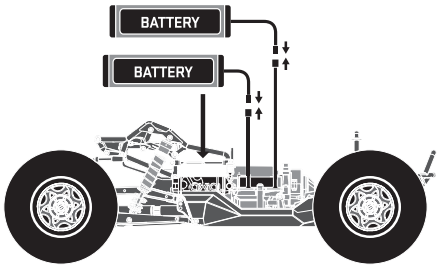

☐ Turn on transmitter FIRST then connect batteries

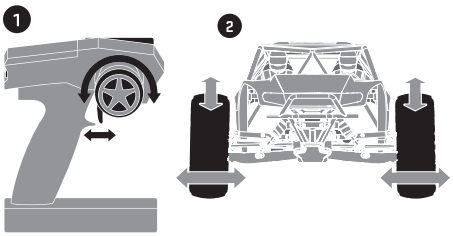

☐ Check to make sure steering and throttle operation work correctly.

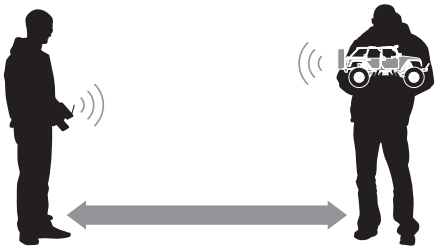

☐ Range check radio system.

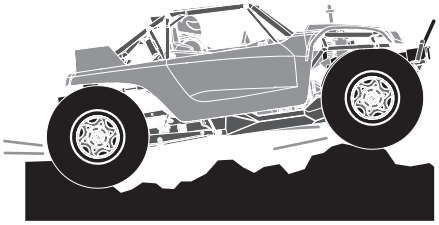

☐ Drive vehicle, challenge yourself and have fun!

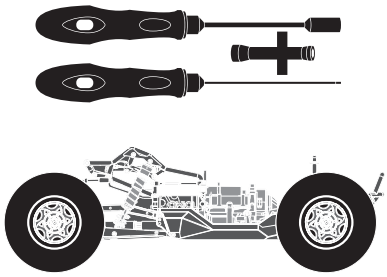

☐ Maintain vehicle.

Charge your battery / Laden des Fahrakkus / Chargement de la batterie

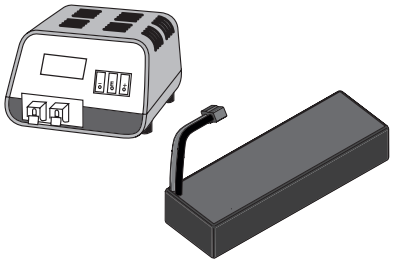

Follow the manufacturer's directions for the charger you purchased to properly charge your batteries.

Folgen Sie den Herstellernrichtungen für den Auflader Ihres gekauft ordentlich, Ihre Batterien zu laden.

Suivre les directions de fabricants pour le chargeur votre a acheté convenablement pour charger vos piles.

Do not use a Nickel Cadmium or Nickel Metal Hydride battery charger to charge LiPo batteries. Damage to the batteries and charger will likely occur resulting in a fire.

Verwenden Sie keine Nickel-Cadmium-oder Nickel-Metall-Hydrid-Akku Ladegerät LiPo-Akkus aufladen. Schäden an den Batterien und Ladegerät wird wahrscheinlich auftreten, was zu einem Brand.

Ne pas utiliser un chargeur de batterie au nickel-cadmium ou nickel-métal-hydrure pour recharger les batteries LiPo. Les dommages aux batteries et le chargeur se produira probablement de provoquer un incendie.

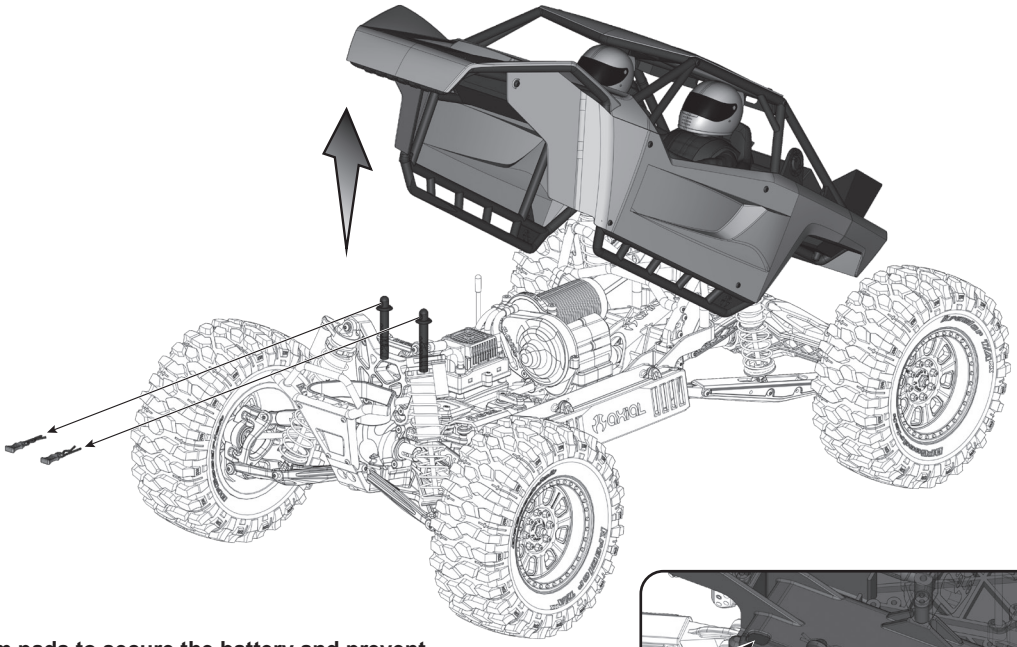

Use the included foam pads to secure the battery and prevent shifting during running

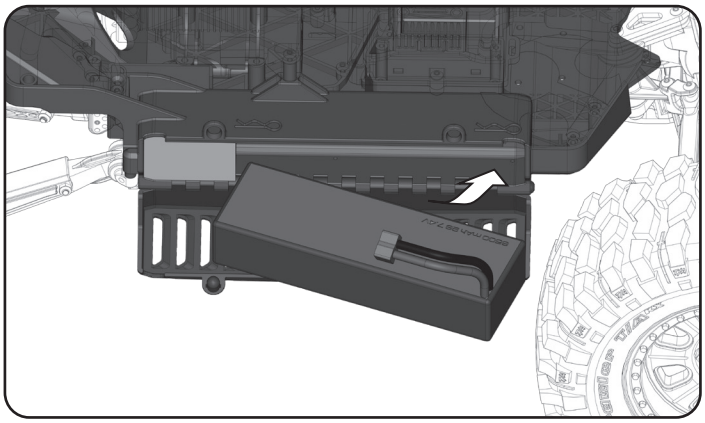

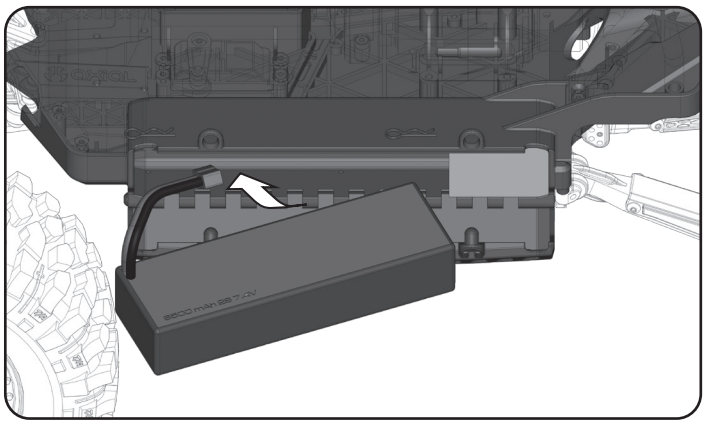

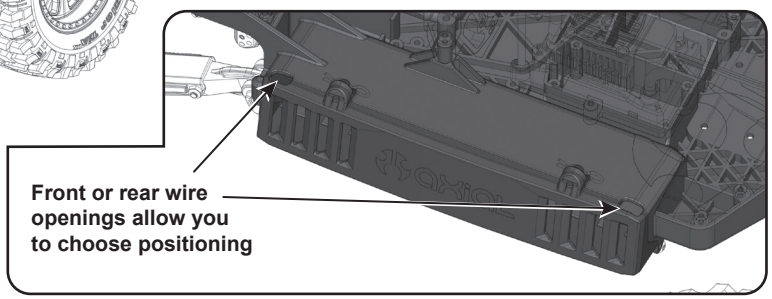

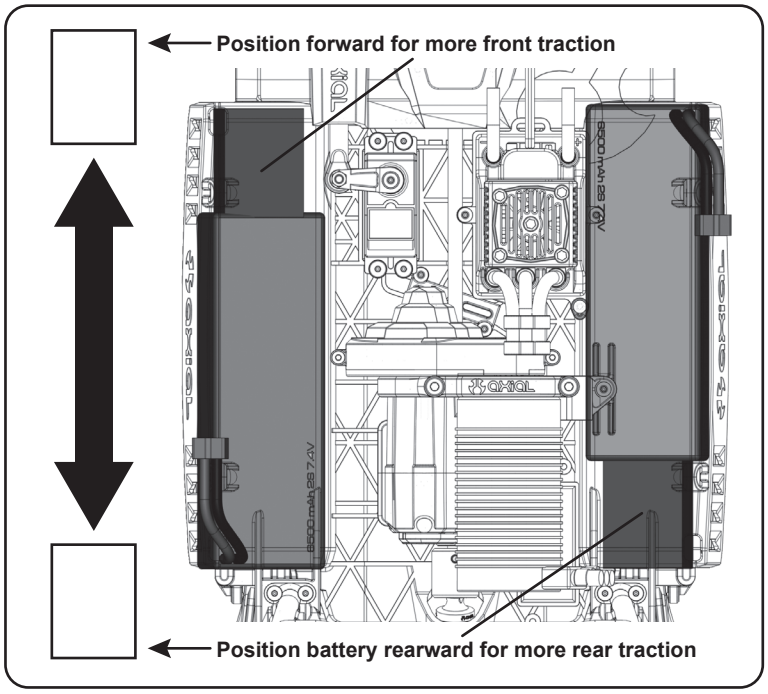

! THIS VEHICLE DOES NOT HAVE A POWER SWITCH - ALWAYS DISCONNECT THE BATTERIES BEFORE TURNING OFF THE CONTROLLER AND WHEN THE VEHICLE IS NOT IN USE

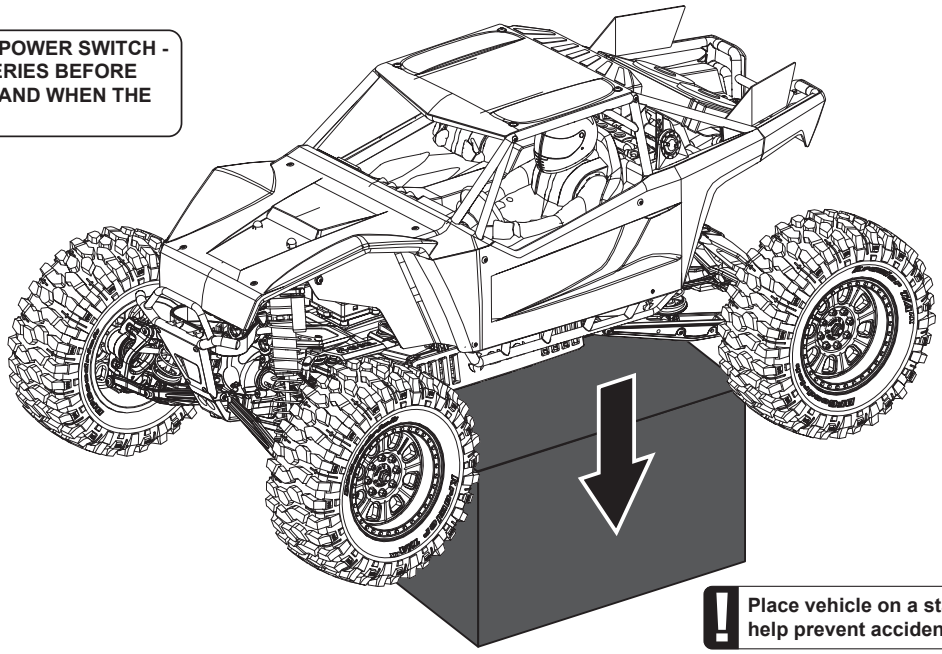

! Place vehicle on a stand or box to help prevent accidental run-away

1 Turn on the transmitter.

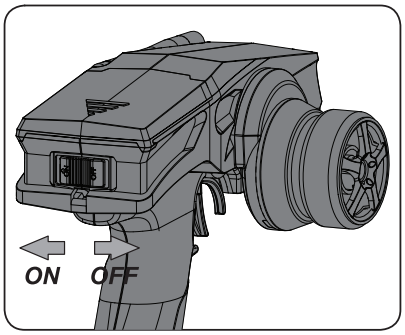

2 Firmly connect both ESC leads to one battery on each side of vehicle

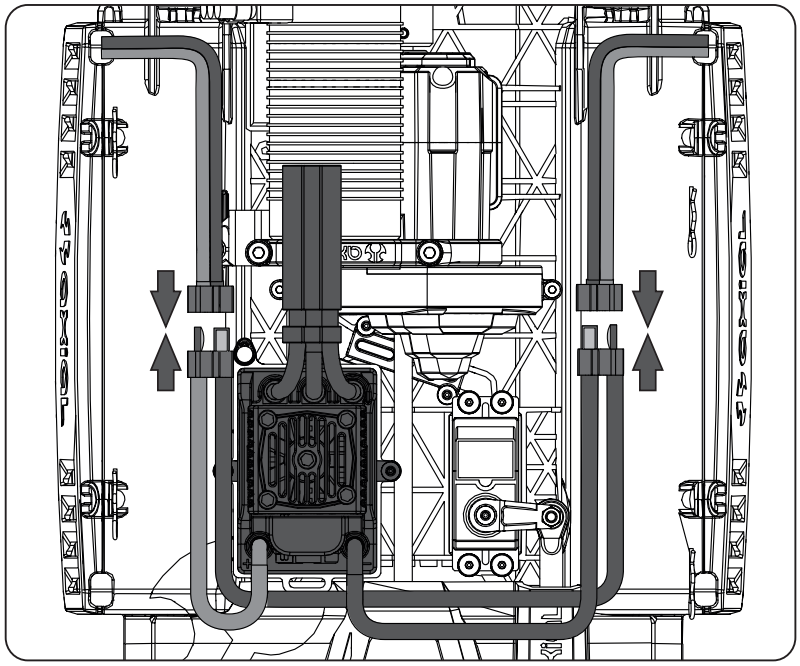

Range-Checking Your Radio System

The radio system should be checked before operating the vehicle to ensure it's operating properly and has adequate range.

1. Turn on the transmitter first and then the vehicle.
2. Have a friend hold the vehicle while keeping hands and loose clothing away from moving parts.
3. Walk away until you are at the farthest distance you plan to operate the vehicle.
4. Steer the vehicle back and forth and throttle both forward and reverse making sure there is no erratic behavior.
5. If any erratic behavior is exhibited do not operate the vehicle, call customer service for further assistance.

RANGE-CHECKING FOR DISTANCE

Steering trim setup

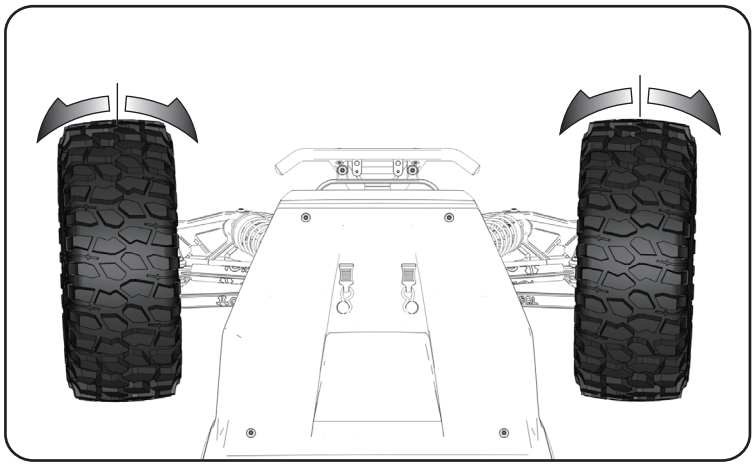

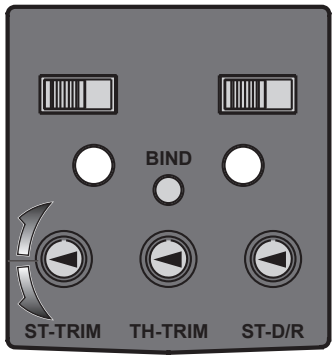

AE-3 Vanguard Forward/Reverse Brushless ESC Instruction

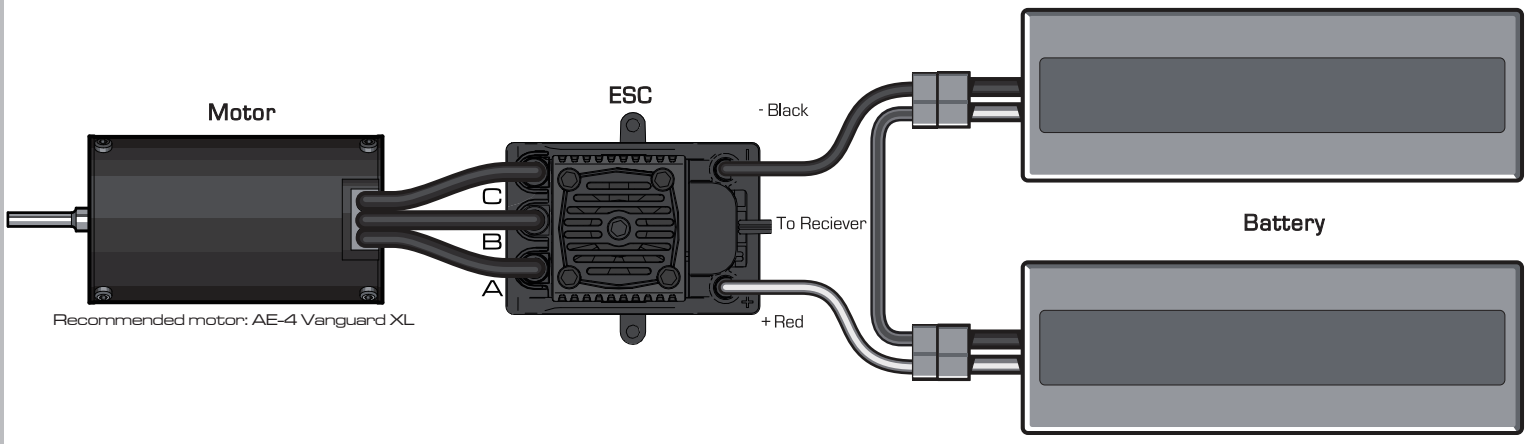

Brushless ESC and Motor Setup:

- Mount the ESC in an area that is well ventilated and isolated from vibration and shock.
- Connect the ESC wires to the motor. Generally A to A, B to B, and C to C.
- Plug the receiver wire into the throttle channel on the receiver.
- Before plugging the battery into the ESC, make sure your transmitter is on and the throttle trim is set to zero.
- Plug in the battery to the ESC with the ESC switch in the OFF position.
- Apply full throttle on the transmitter.
- Turn on the ESC switch while applying full throttle.
- The ESC will emit a series of beeps with the red LED.
- Continue applying full throttle until the ESC blinks green and emits a series of beeps.
- Once the ESC blinks red, apply full brake (reverse) on the transmitter.
- The ESC will emit a series of beeps while blinking red to finalize the brake/reverse endpoint.
- Return the throttle to the neutral position and the ESC will emit a series of beeps to finalize the neutral point.
- The ESC will emit a final series of beeps confirming the ESC is ready to operate.
- Apply throttle to make sure the motor is going the direction you wanted.
- To reverse the direction of the motor, switch two of the wires going to the motor.

Notes:

- If the ESC setup does not initialize when holding the full throttle, try switching the throttle reversing switch on the transmitter.
- LiPo Cut-Off is set to "ON" from the factory
- Use the CastleLink (Optional, not included) to access the advanced settings available in the ESC.
- Visit http://www.castlecreations.com/ for more informtaion on the CastleLink USB Programming Kit.

Specifications:

Input voltage:	3S Lipo/8 NiCELL
Size:	1.95inx1.51in
Weight:	62.3grams
On-Resistance FET:	.00055 Ohms (per phase)
BEC Voltage/A:	5.0V 2.0A Peak
PWM Frequency:	12 KHZ

CAUTION

CONNECT THE BATTERY PACK JUST BEFORE DRIVING AND DISCONNECT IT IMMEDIATELY AFTER.
ALWAYS MAKE SURE YOU ARE CONNECTING THE ESC TO A PROPER POWER SOURCE THAT HAS THE CORRECT VOLTAGE & POLARITY. INCORRECT VOLTAGES OR REVERSED POLARITY WILL DAMAGE THE ESC.
ONCE THE BATTERY PACK IS CONNECTED, HANDLE THE MODEL WITH EXTREME CARE, MAKE SURE YOU ARE CLEAR OF ALL ROTATING PARTS.

SETUP BEFORE STARTING - EINSTELLUNG VOR DEM START

Steering and Throttle Reverse Switch
Servo Reverse Schalter

Servo Factory Settings
Beachten Sie die Pfeile für die Servo Grundeinstellung

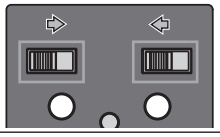

Binding Button
Binding Taster

See instructions below
Rückseite

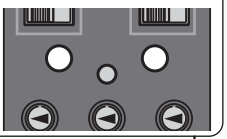

ST.D/R
Steering Dual Rate
Maximaler Lenkausschlag

To be used to adjust steering servo rate and range.
Einstellung des maximalen Lenkausschlages.

Battery Level Indicator
Batterie Statusanzeige

Good Batteries
Volle Batterien

Low Batteries
Fast leere Batterien

When the batteries are low the green indicator light will flash.

Throttle Trim
Gastrimmung

To be used for trimming the throttle operation.
Wird verwendet um den Gasnullpunkt einzustellen.

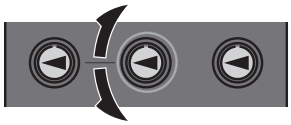

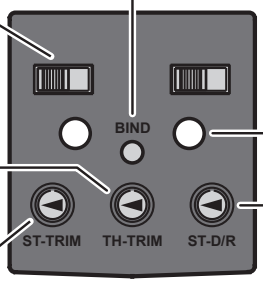

Antenna/Antenne
Flip the antenna up before use

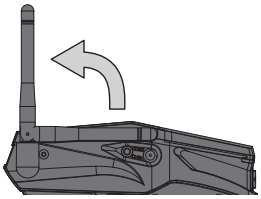

Steering Trim
Lenktrimmung

To be used for trimming the steering operation.
Wird verwendet, um den Geradeauslauf einzustellen.

Steering Wheel
Lenkrad

To be used for steering operation.
Wird verwendet um das Fahrzeug zu steuern.

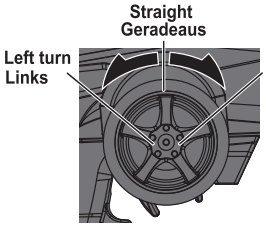

Charger plug in
Ladebuchse

※ Rechargeable AA batteries required. Charger not included. Nutzen Sie diese Ladebuchse nur mit aufladbaren Batterien.

Throttle Trigger
Gas/Brems Hebel

To be used for throttle operation.
Um das Fahrzeug zu beschleunigen & abzubremsen.

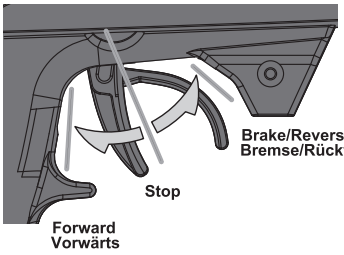

Power Switch
Ein/Aus Schalter

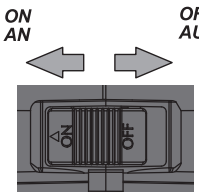

RADIO BINDING INSTRUCTIONS

The radio system is bound from the factory so no binding should be necessary. However, if you are matching a new receiver to the transmitter, please follow these steps:

1. Install AA batteries into the transmitter.
2. Insert the binding plug into CH 3 port on the receiver. (Figure 1)
3. Turn on the receiver. You will notice the two LED's are now flashing meaning the receiver is in 'seek' mode and ready to find the transmitter.
4. Press and hold the binding button on the transmitter while turning on the power switch. (Figure 2)
5. The LED's on the receiver should stop flashing indicating it's now bound to the transmitter.
6. Release the binding button on the transmitter and remove the binding plug from the receiver.
7. Turn off the receiver, then turn off the transmitter. Once powered on again, radio binding has been completed.

If the system did not bind please repeat step's 1-7 again or call Axial Customer Service: (877) 64-AXIAL (877-642-9425). NOTE: the AX-3 transmitter will only bind with the AR-3 receiver

(Figure 1)

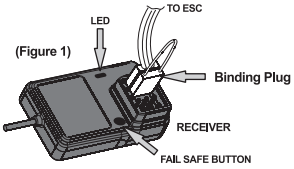

Fail Safe Programming

1. With the radio system bound and powered up, position the throttle trigger to the stop position. For electric applications with drag brake, put the trigger in the stop position. For Nitro applications, position the throttle to apply some amount of brake.

2. With the throttle trigger positioned to desired fail safe position press and hold the button on the receiver until the red LED starts flashing. As soon as it starts flashing release the button; it will then flash for 3 more seconds. Fail safe is now programmed.

3. To test, elevate your vehicle so the tires are off the ground. Apply some throttle and turn the transmitter off. If the throttle returns to neutral within a few seconds, fail safe is programmed correctly. If your vehicle keeps running, fail safe was not programmed correctly; repeat steps 1 and 2.

(Figure 2)

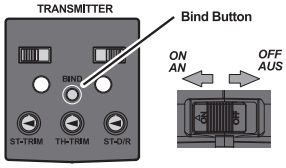

Battery Cover
Batteriefach

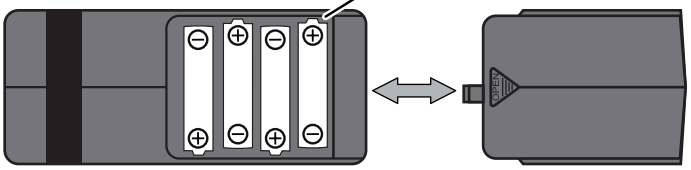

Transmitter Battery Installation/Einglegen der Senderbatterien

Open battery cover at bottom of transmitter. Install batteries. Follow the direction of batteries designated in the inside of battery box.
Öffnen Sie das Batteriefach an der Unterseite des Senders. Legen Sie die Batterien entsprechende der angegebenen Polarität ein.

! ATTENTION
Do not mix batteries of different ages or types.
Mischen Sie keine Batterien verschiedenen Typs oder Alters.

CAUTION
- NEVER RUN R/C MODEL IN CROWDED AREA OR NEAR SMALL CHILDREN
- PROTECT YOUR SYSTEM FROM MOISTURE
- REMOVE BATTERY FROM R/C MODEL WHEN STORING

CAUTION

Trouble Shooting / Fehlerbehebung / Dépannage

Problem Problem Problème	Cause Grund Cause	Remedy Lösung Remède
Does not move Das Auto fährt nicht Le véhicule ne boughe pas	Batteries are not installed properly in the transmitter. Die Batterien sitzen nicht korrekt im Sender. Les piles ne sont pas placées correctement dans l'émetteur. Weak or no battery in model. Leerer oder kein Akku im Auto. Batterie faible ou non installée Damaged motor. Kaputter Motor. Moteur endommagé Frayed or broken wiring. Beschädigte Verkabelung. Câble dénudé ou coupe ESC is shut down by heat protection circuit. Notabschaltung des Reglers wegen Überhitzung. Le système ESC est fermé par le circuit de protection thermique.	Make sure batteries are properly installed. Legen Sie die Batterien korrekt ein. Positionnez correctement les piles dans l'émetteur. Install charged battery. Einbauen eines geladenen Akkus. Mettez en place une batterie chargée Replace with new motor. Austausch durch einen neuen Motor. Remplacez par un nouveau moteur Splice and insulate wiring completely. Erneuern und isolieren Sie die kaputte Stelle. Faites une épissure et isolez complètement le câble. Stop driving immediately, do not drive the car until the Speed Controller cools down. Fahren Sie nicht weiter. Warten Sie bis der Fahrten regler abgekühlt ist. Arrêtez immédiatement de conduire, ne pilotez pas la voiture tant que le contrôleur de vitesse n'a pas refroidi.
No Control. Keine Kontrolle über das Auto Pas de contrôle	Improper antenna on transmitter or model. Zu kurze Antenne am Sender oder Auto. Antenne inadéquate sur l'émetteur ou le véhicule Weak or no batteries in transmitter or model. Leere oder keine Batterien im Sender oder Auto. Batterie faible ou absente dans l'émetteur ou le véhicule. Neutral position or trim is incorrect. Neutralposistion oder Trimmung sind verstellt. La position neutre est incorrecte ou le trim n'est pas réglé. Are the receiver and battery connections properly connected? Sind der Empfänger und die Batterieverbindungen ordentlich verbunden? Son conectadas apropiadamente las conexiones del receptor y la batería?	Install charged or fresh batteries. Einbauen voller Batterien. Mettez des batteries rechargées ou neuves. Fully extend antenna. Ziehen Sie die Antenne vollständig aus. Dépliez complètement l'antenne. Adjust the steering trim. Stellen Sie die Lenkungstrimmung neu ein. Réglez le trim de direction. Check receiver and battery connections. Prüfen Sie Empfänger und Batterieverbindungen. Compruebe conexiones de bateria y receptor.
Steering and Throttle Function Reversed. Lenkung und Gas funktion-ieren genau verkehrt herum. Direction et accélération inverses.	Servo reverse switch is in wrong position. Servorichtungs-Schalter ist in der falschen Position. L'interrupteur de marche arrière du servo est dans la mauvaise position Please check that the wires from ESC to motor are connected properly. Bitte überprüfen Sie, ob die Kabel vom Regler zum Motor richtig sitzen. Veuillez vérifier que les fils allant de l'ESC au moteur sont correctement raccordés.	Set to correct position. Satz, Position zu korrigieren Vérifiez la position correcte Check to make sure motor and ESC are properly connected. Kontrolle sich zu vergewissern, dass Motor und ESC ordentlich verbunden sind. Le contrôle pour assurer que le moteur et ESC est conven-ablement connecté.

DON'T SETTLE FOR
NORMAL BEHAVIOR

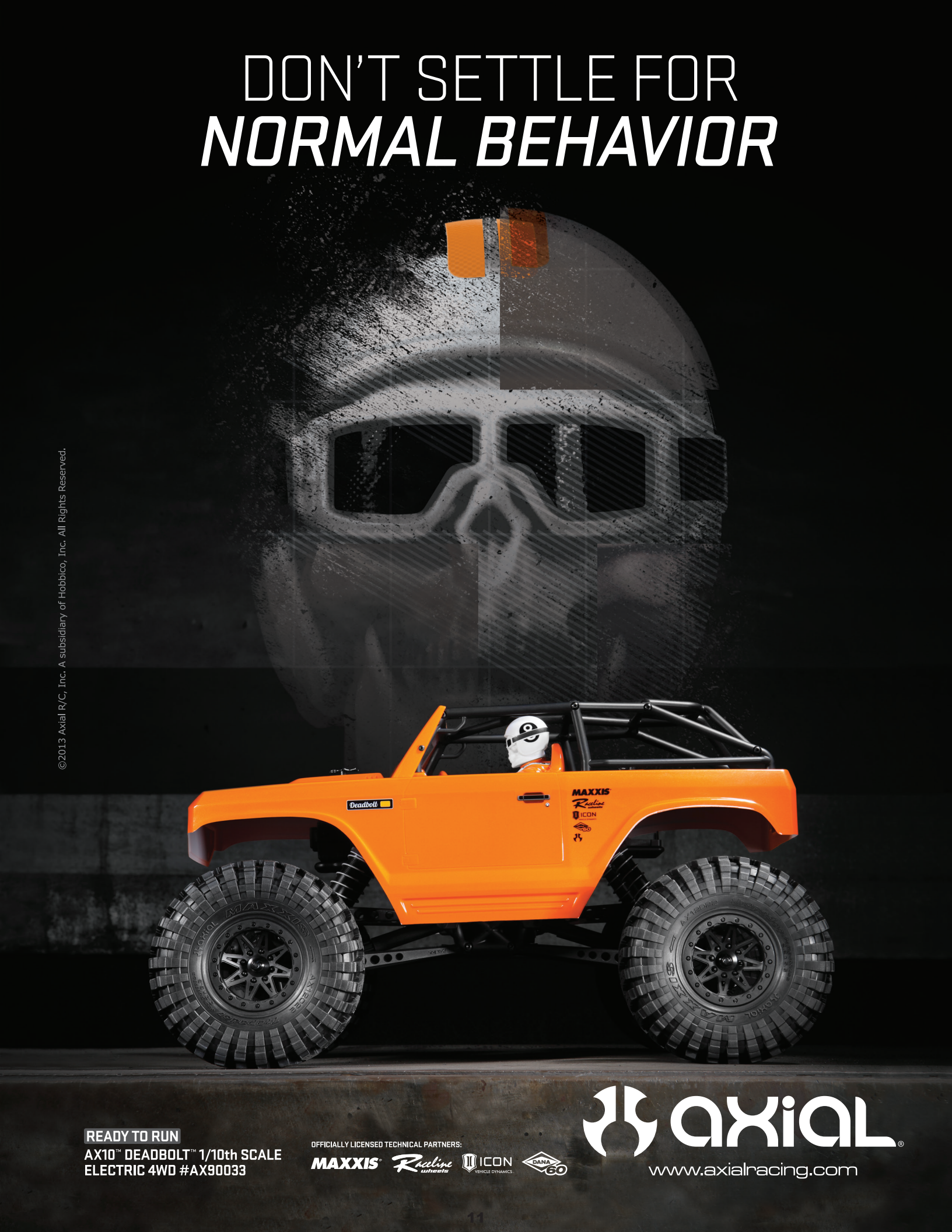

©2013 Axial R/C, Inc. A subsidiary of Hobbico, Inc. All Rights Reserved.

READY TO RUN
AX10™ DEADBOLT™ 1/10th SCALE ELECTRIC 4WD #AX90033

OFFICIALLY LICENSED TECHNICAL PARTNERS:
MAXXIS Raceline wheels ICON VEHICLE DYNAMICS DANA 60

axial®
www.axialracing.com

Maintenance

Just like a full size car or truck your RC vehicle must undergo periodic maintenance in order to ensure peak running performance. Preventative maintenance will also help avoid needless breakages which could result in costly repairs. Below are some suggestions to properly maintain your vehicle.

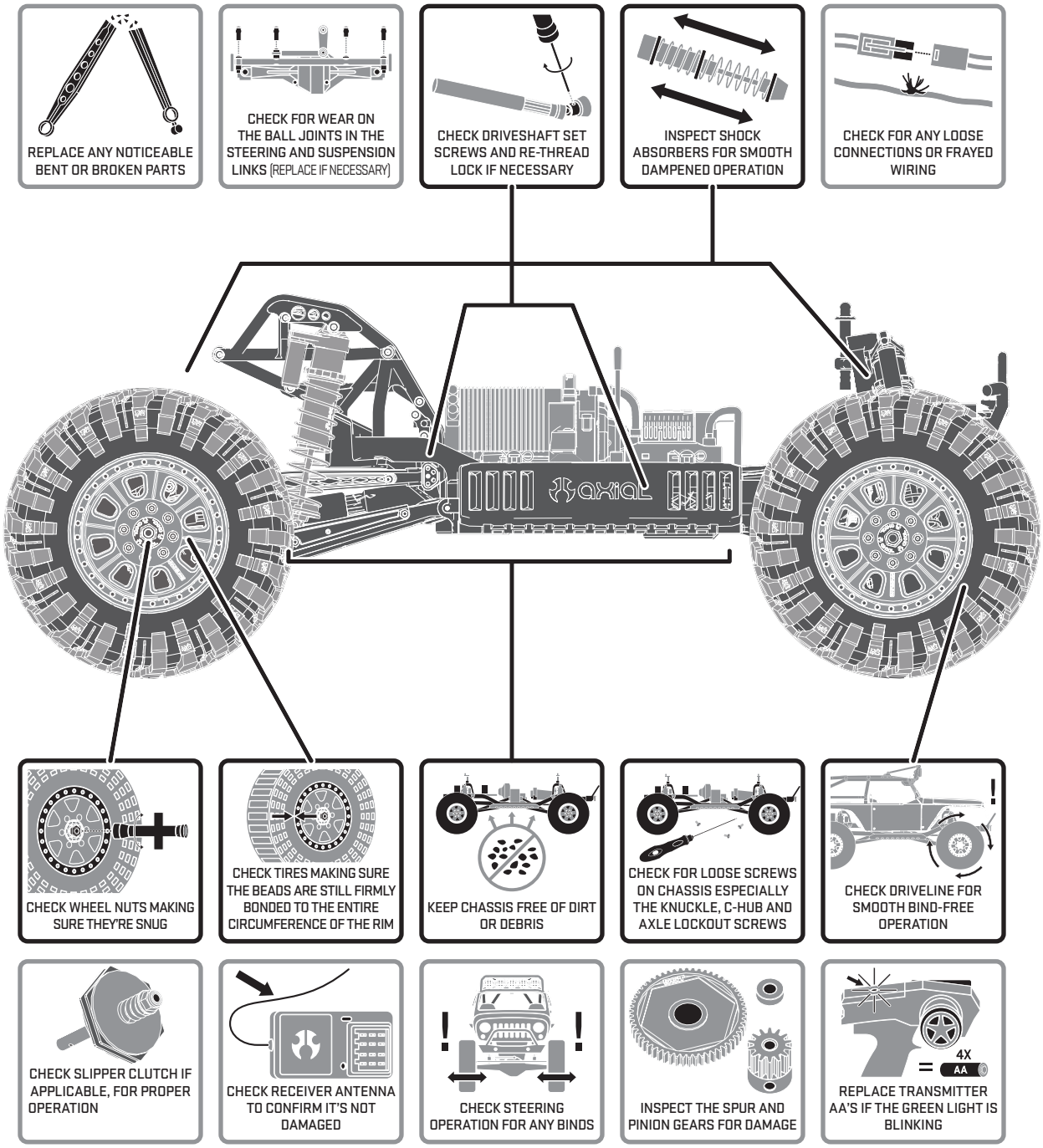

Gear Mesh

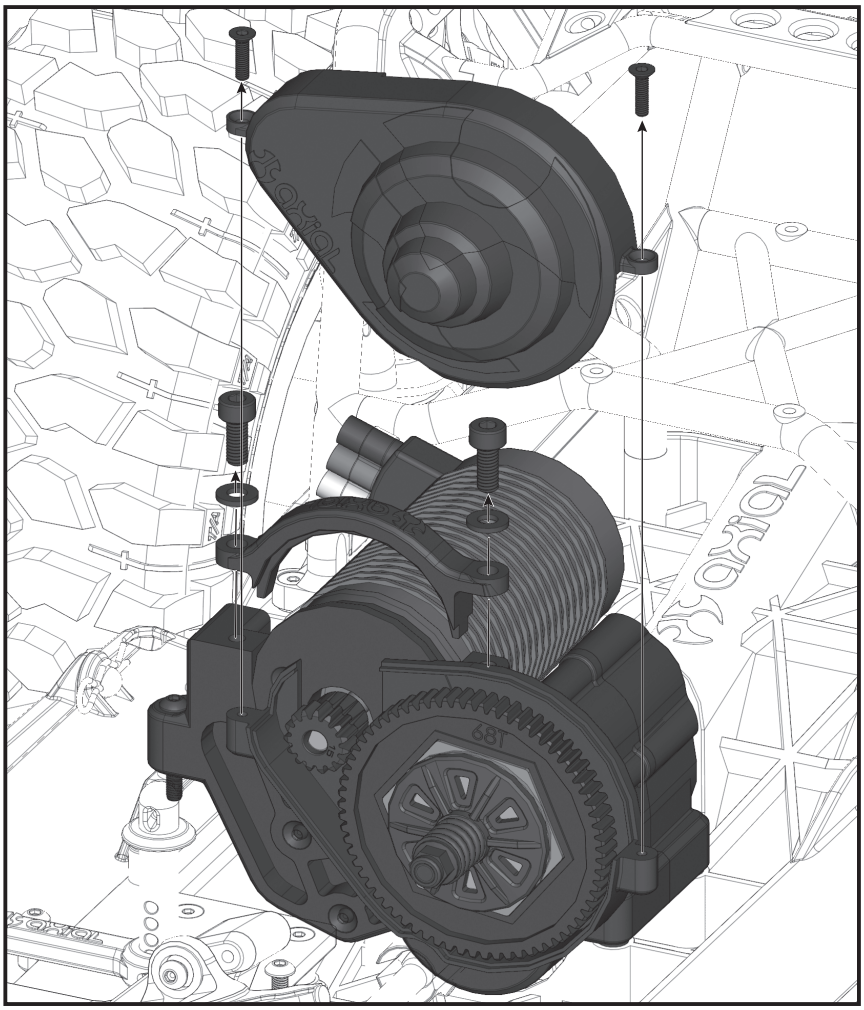

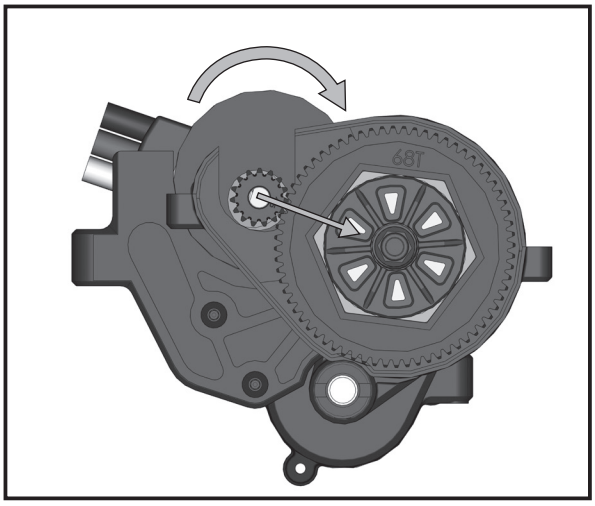

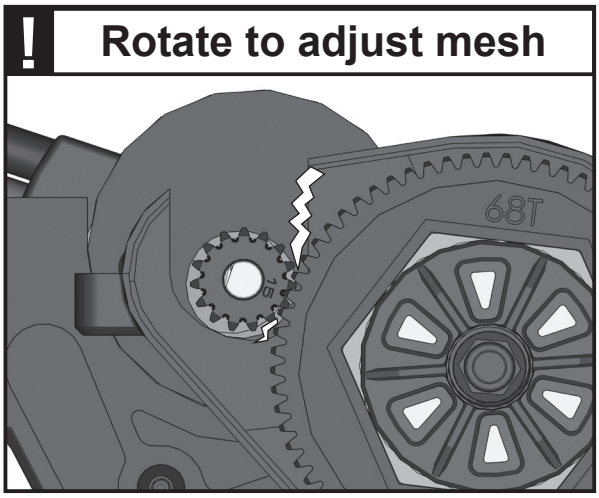

Gear Ratio / Getriebeübersetzung

Use this equation to calculate the final drive ratio
Final Drive Gear Ratio = (Spur/Pinion) X 5.21

Mit dieser Gleichung können Sie die Gesamtübersetzung berechnen.
Gesamtübersetzung = (Spur/Pinion) X 5.21

Slower - More Torque
Langsamer - Mehr Kraft

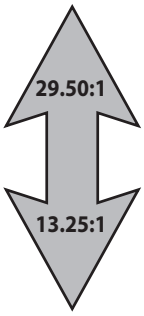

Faster - Less Torque
Schneller - Weniger Kraft

32 Pitch		Pinion										
		12	13	14	15	16	17	18	19	20	21	22
Spur	56	4.67	4.31	4.00	3.73	3.50	3.29	3.11	2.95	2.95	2.67	2.55
	60	5.00	4.62	4.29	4.00	3.75	3.53	3.33	3.16	3.16	2.86	2.73
	64	5.33	4.92	4.57	4.27	4.00	3.76	3.56	3.37	3.37	3.05	2.91
	68	5.67	5.23	4.86	4.53	4.25	4.00	3.78	3.58	3.58	3.24	3.09

Slipper Adjustment

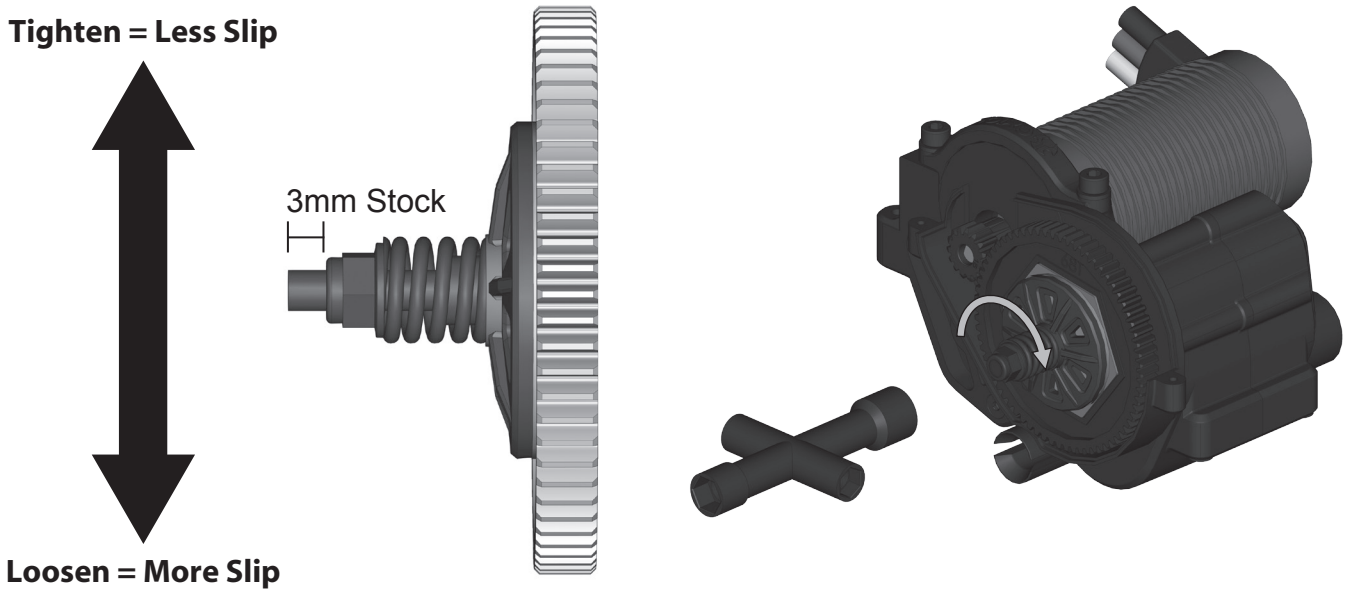

Warranty Info

AXIAL LIMITED WARRANTY

Your Axial product is warranted to be free of defects in materials and workmanship when new in the factory sealed box. This warranty does not cover damages due to normal wear and tear, users' failure to perform routine maintenance, error of assembly or installation, modifications or addition of aftermarket parts or option parts. This warranty lasts as long as the original purchaser owns the product and is not transferable (verified by dated itemized sales receipt accompanied with product). In the event of a defect under this warranty, Axial will, at our discretion, repair or replace the product, provided our inspection indicates that an original defect exists. Axial provides a 10-day warranty from the date of purchase on electronics (i.e. servo, esc, radio). Axial reserves the right to replace any product which is no longer available with a product of comparable value and function. If Axial determines the repair is not covered under warranty guidelines, there could be a charge applied for the repair and return shipping charges. Note: Purchasing products from unauthorized distributors may void warranty and prevent support and service.

INTERNATIONAL CUSTOMER WARRANTY

Please return product to the dealer where the purchase was made. If your Axial product purchase was made through an on-line retailer, any warranty issues must be taken care of by that retailer. Axial assumes no responsibility for Axial products sold internationally by on-line retailers.

REPAIR

For warranty repair, please contact Axial Customer Service at (877) 64-AXIAL (877-642-9425).

HOURS AVAILABLE:

8:00 am - 5:00 pm Monday through Friday, Central Time.

Shock Maintenance/Tuning

AX31087 x4
MT Wheel Washer

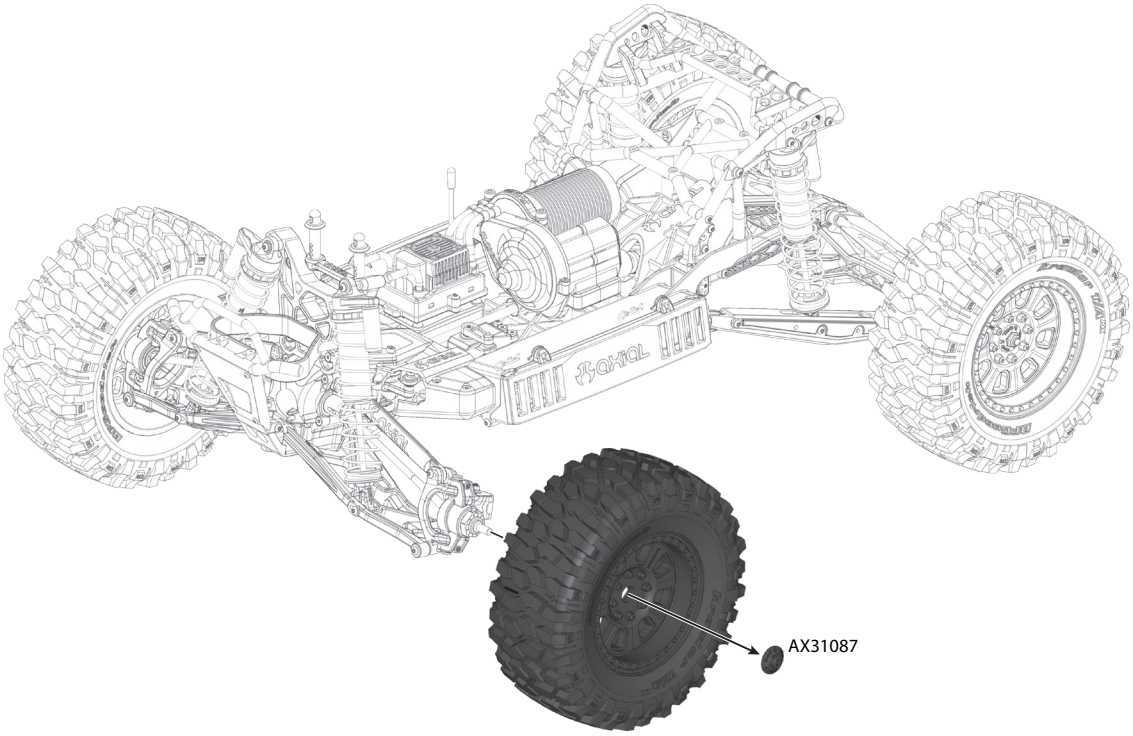

AXA119 x4
M3x20mm

AXA121 x4
M3x30mm

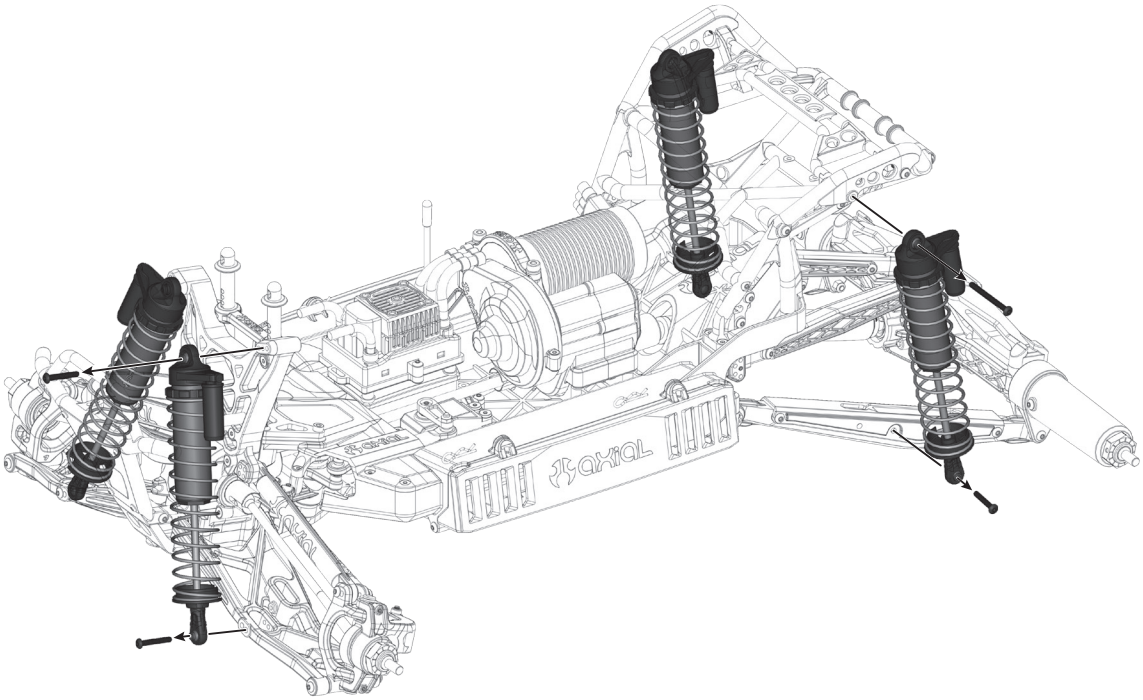

AXA1041
M2.5 Nylon Locking Hex Nut **x4**

AXA1069
Washer 2.7x6.7x0.5 mm **x8**

AX31076
P4 Oring **x8**

AX31075
O-Ring 15.5x1.5mm **x8**

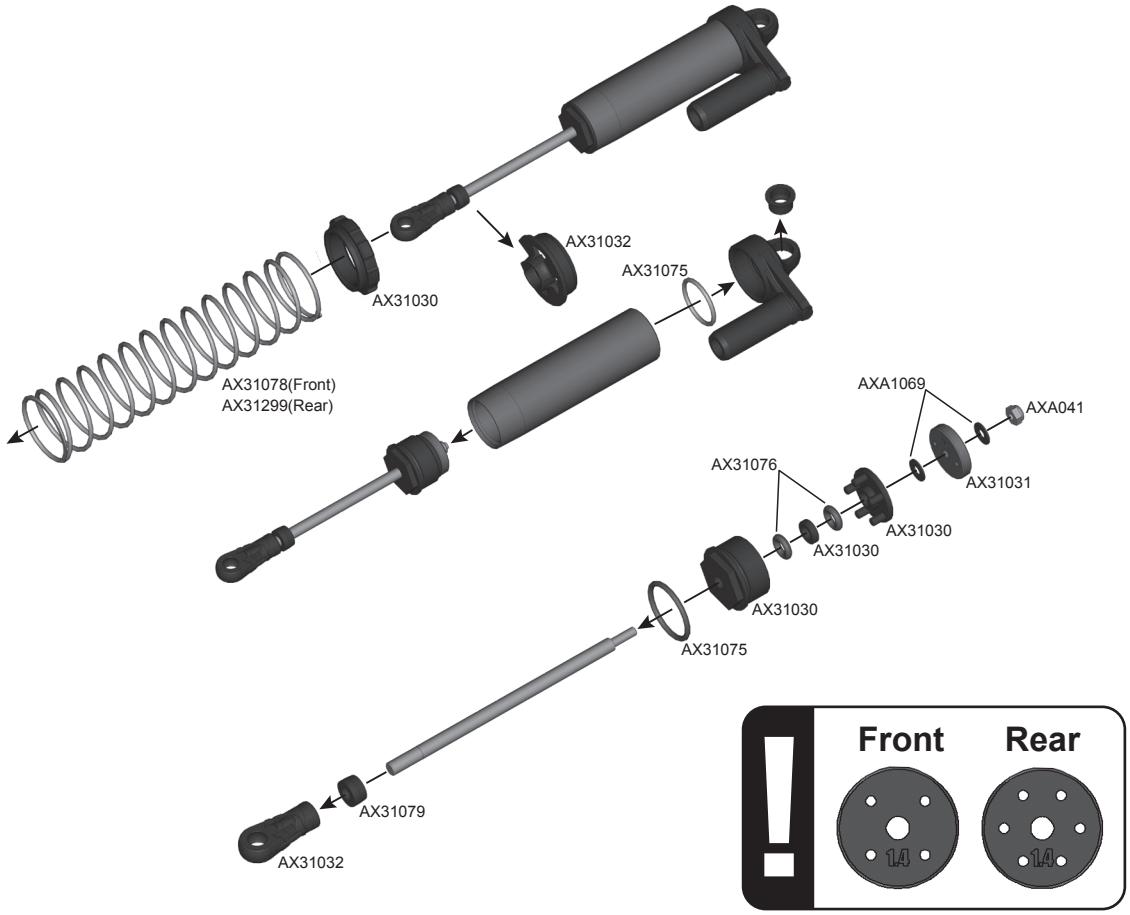

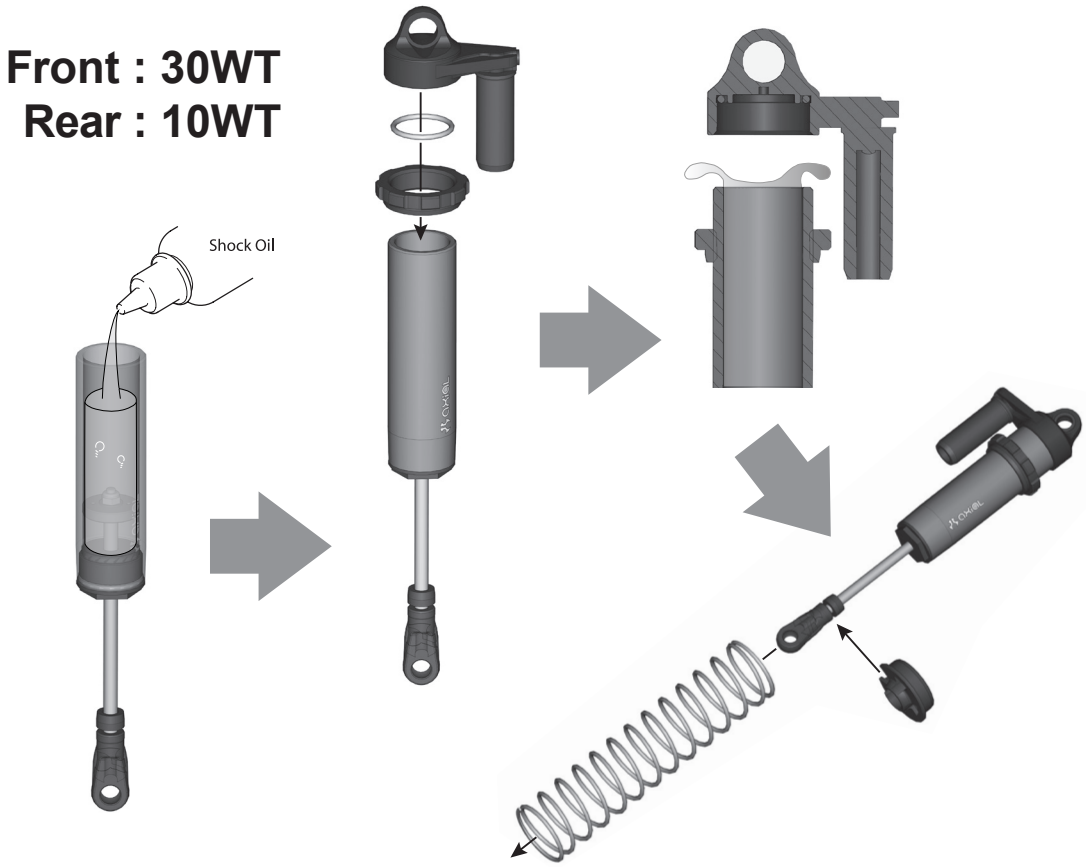

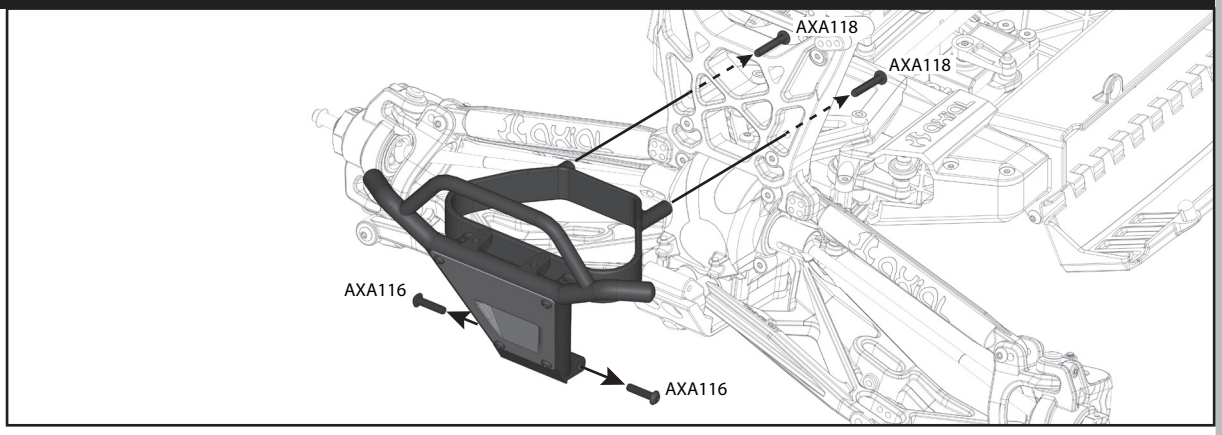
AXA118
AXA118
AXA116
AXA116

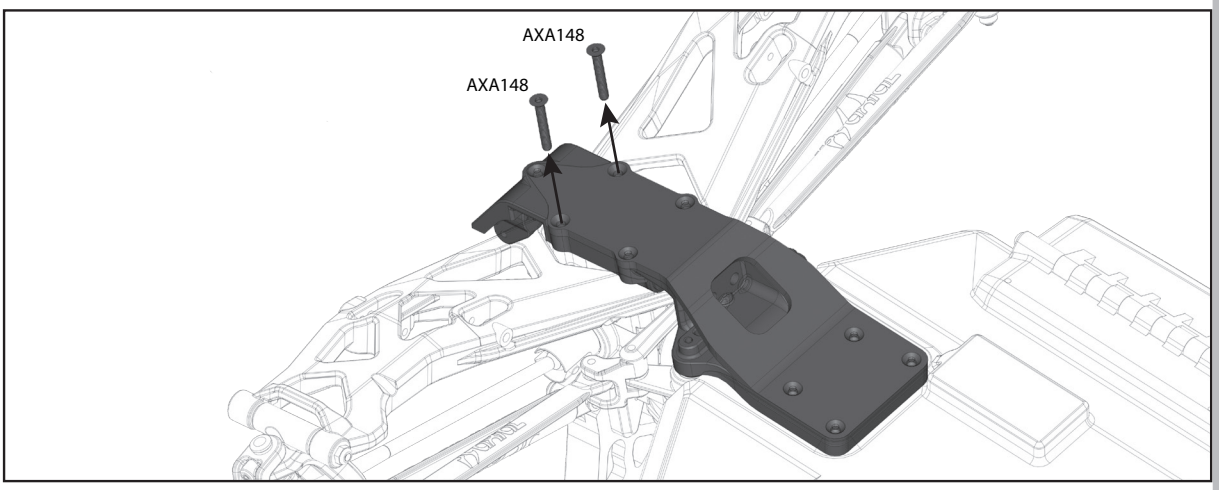
AXA148
AXA148

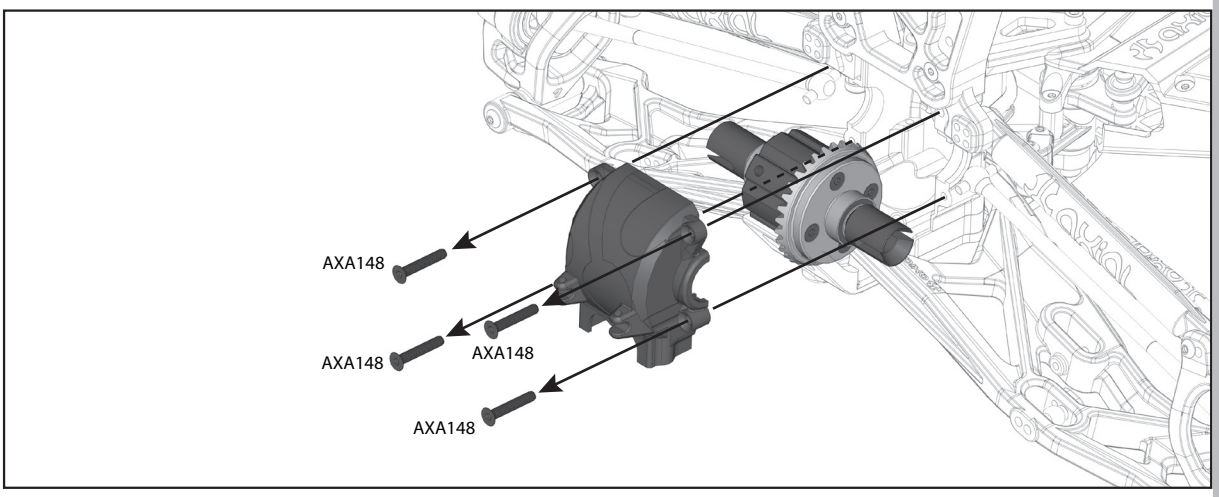
AXA148
AXA148
AXA148
AXA148

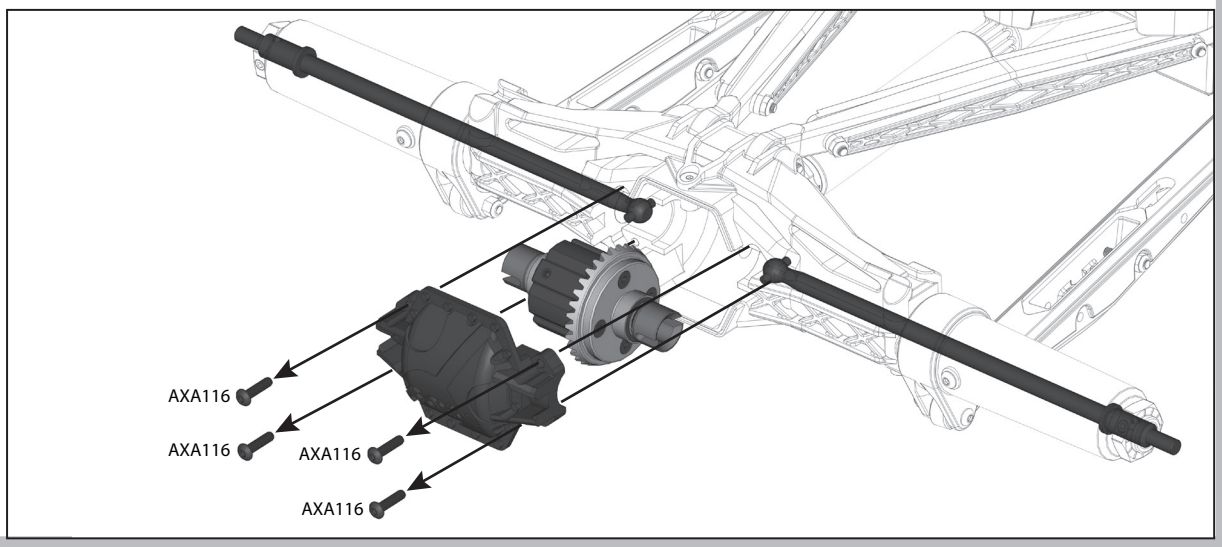
AXA116
AXA116
AXA116
AXA116

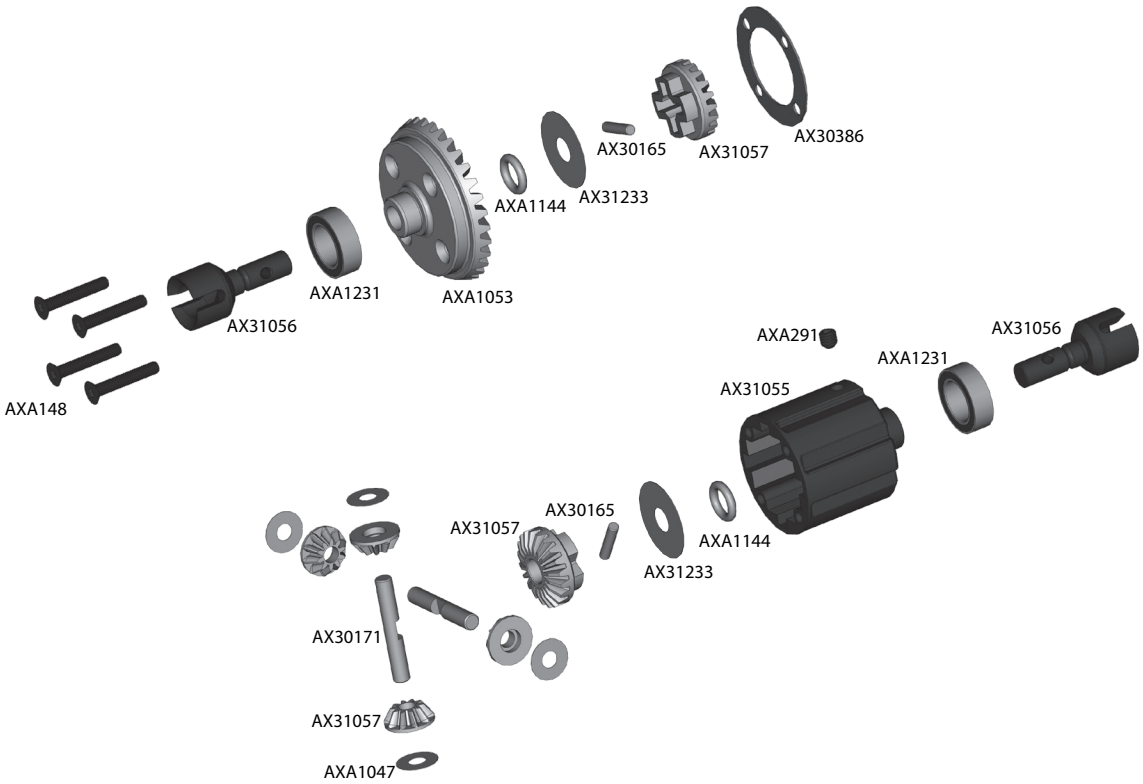

Front : 20000CST
Rear : 20000CST

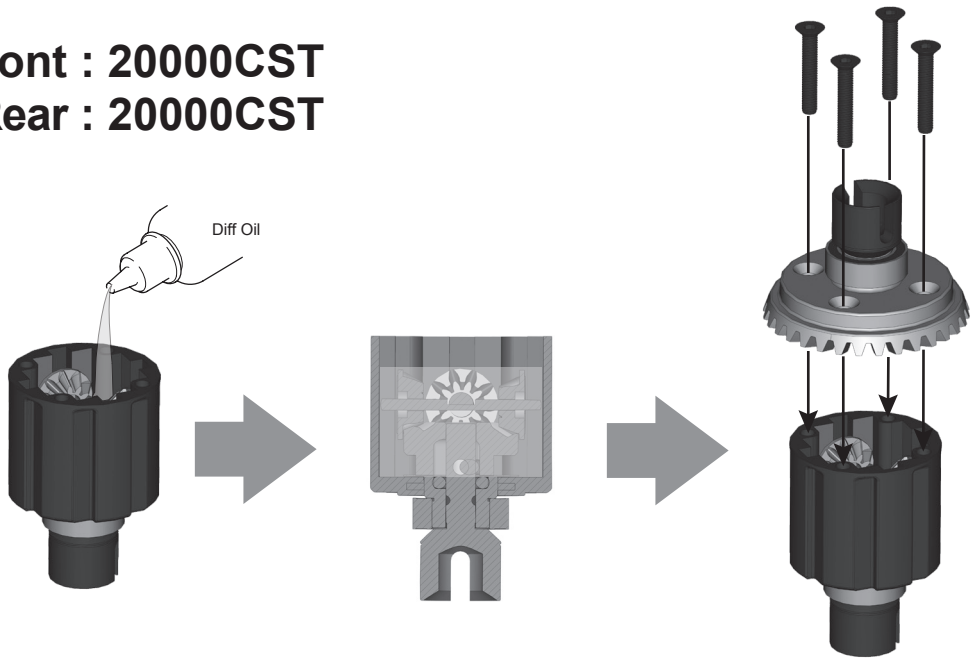

Parts Reference / Übersicht aller Teile / Référence des pièces

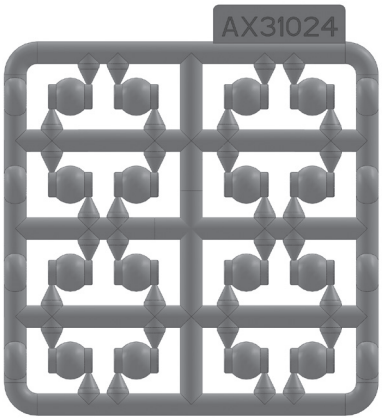

AX31024 x4
Rod End Ball Set (6.8x8x3mm)

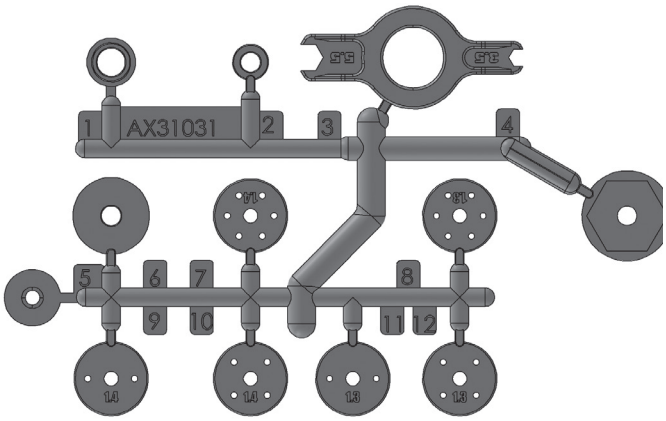

AX31031 x4
Big Bore Shock Parts and Piston (16mm)

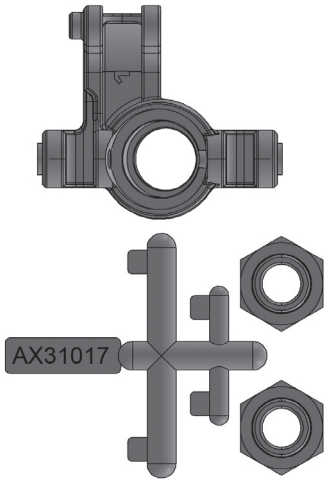

AX31017
MT Front Hubs

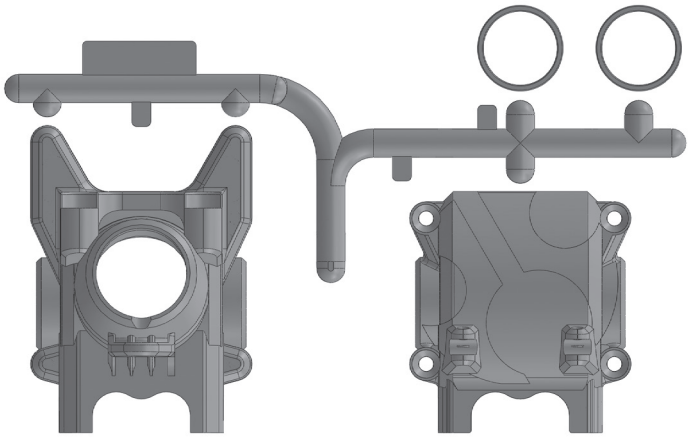

AX31052
Yeti™ XL Front Bulkhead

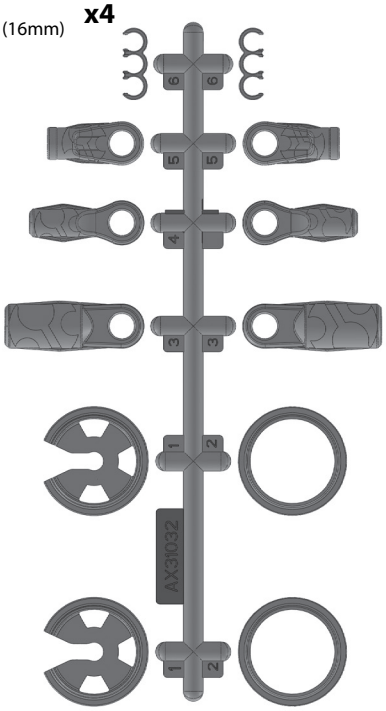

AX31032
Big Bore Shock Parts and Rod Ends (16mm)

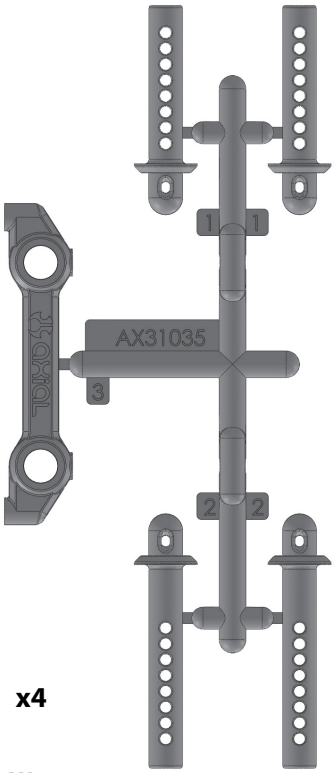

AX31035 x4
Yeti™ XL Body Mount Set

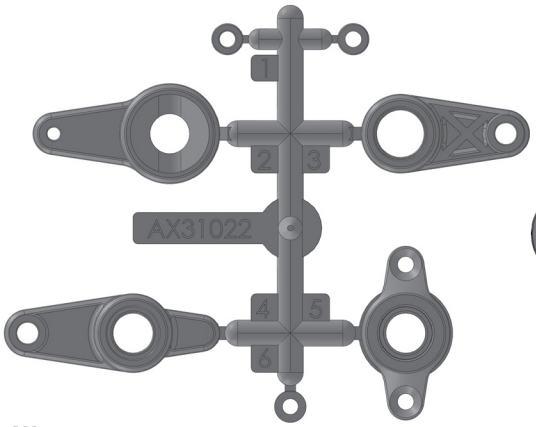

AX31022
Steering Bellcrank

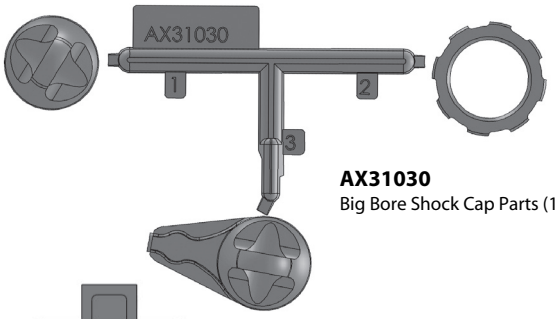

AX31030
Big Bore Shock Cap Parts (16mm)

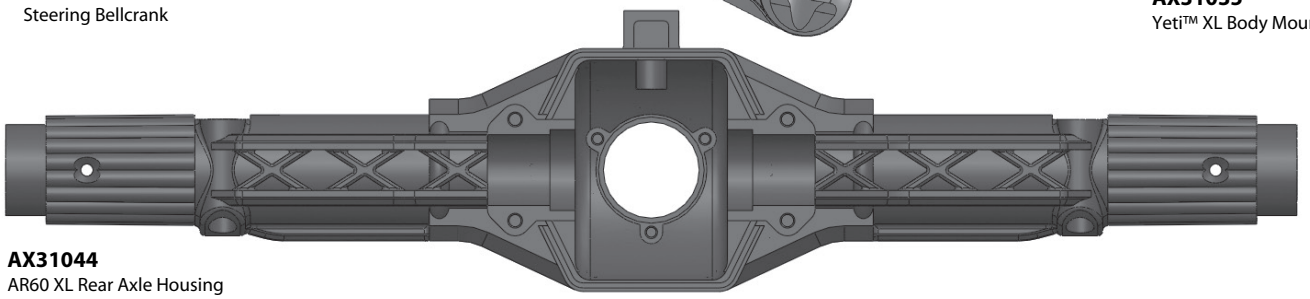

AX31044
AR60 XL Rear Axle Housing

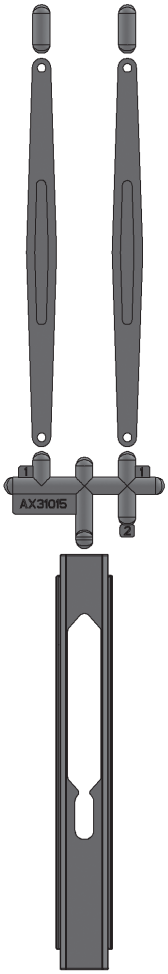

AX31015 x2
MT Rear Links stiffeners

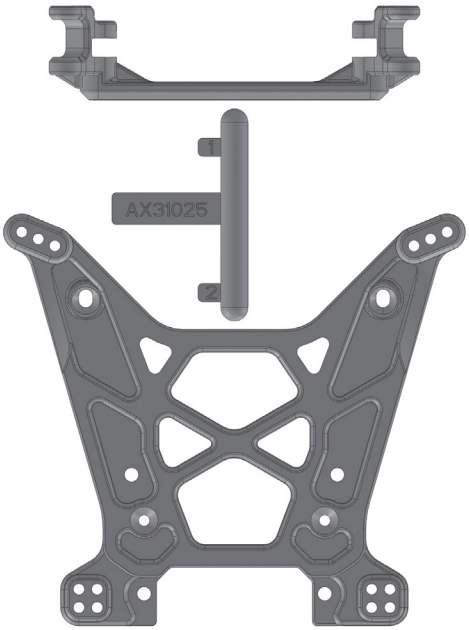

AX31025
Yeti™ XL Front Shock Tower

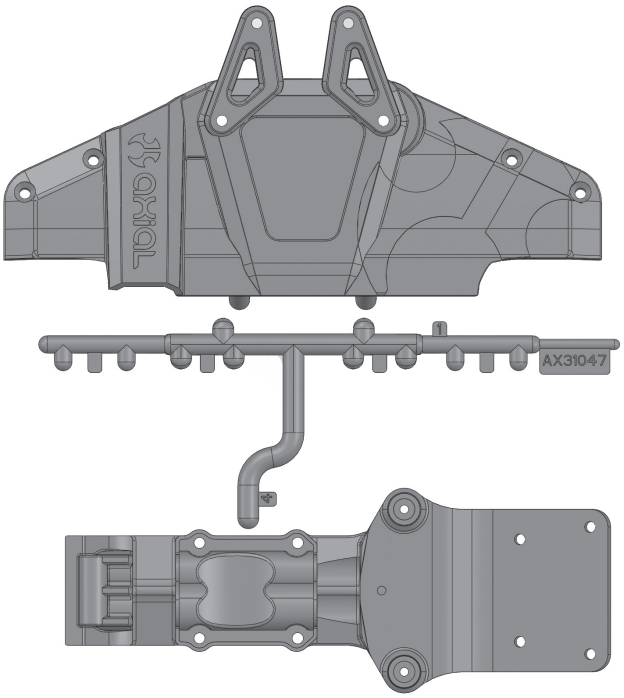

AX31048
Yeti™ XL Front Clip and Skid Plate

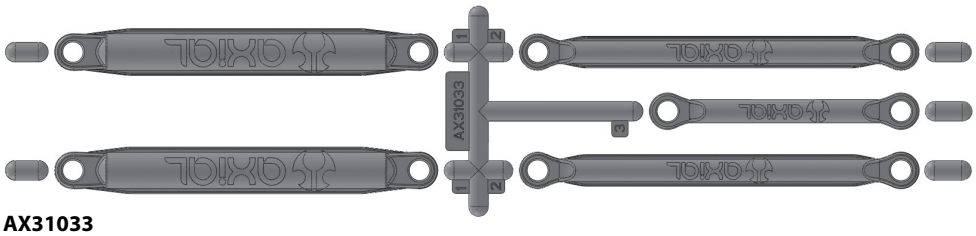

AX31033
Yeti™ XL Front Links (Upper Control and Steering)

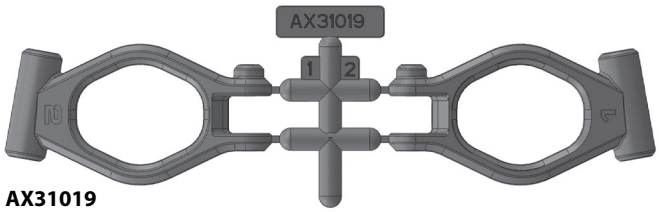

AX31019
Yeti™ XL Steering Knuckle Carrier Set

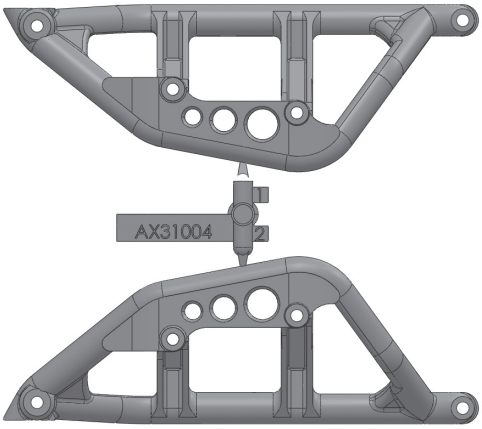

AX31004
Yeti™ XL Rear Shock Mount

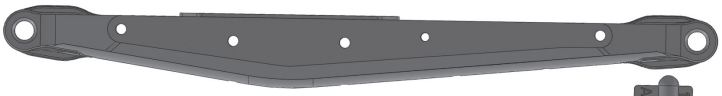

AX31014
Yeti™ XL Rear Links (Upper and Lower)

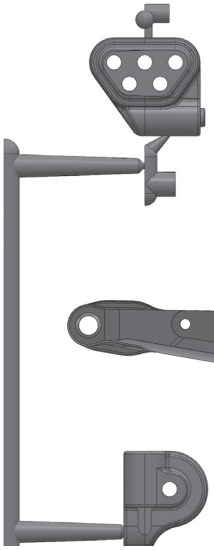

AX31008
Yeti™ XL Rear Chassis Link Mounts (Upper and Lower)

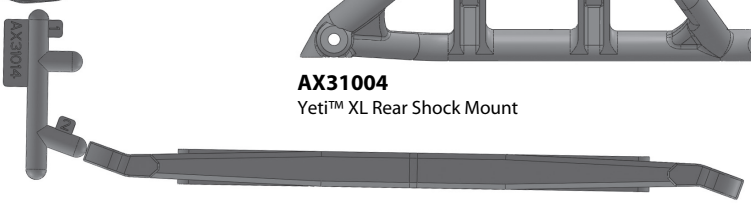

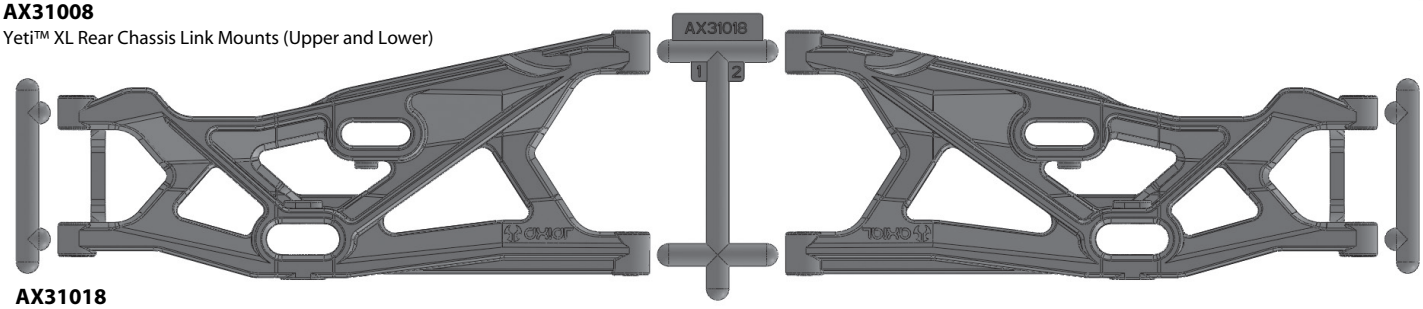

AX31018
Yeti™ XL Lower Front Control Arm Set

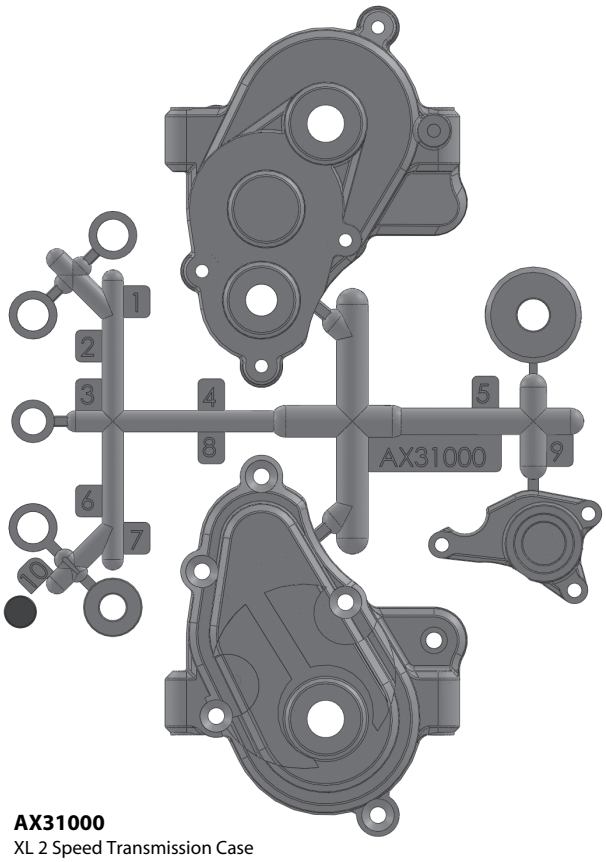

AX31000
XL 2 Speed Transmission Case

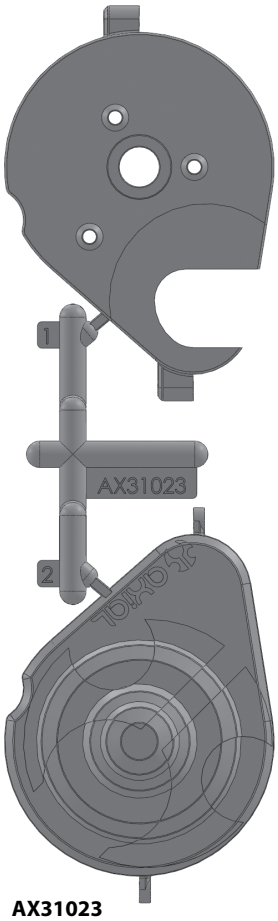

AX31023
Yeti™ XL Transmission Spur Gear Cover

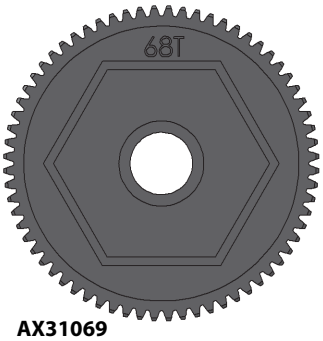

AX31069
68T Spur Gear - 32P(powder metal)

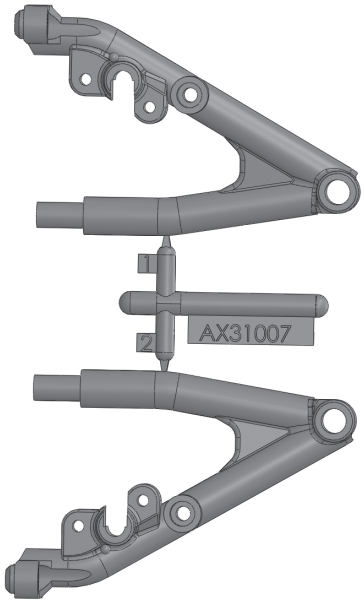

AX31007
Yeti™ XL Chassis Rear Risers

AX31084
AR60 XL Straight Axle Adapter

AX31055
Differential Case

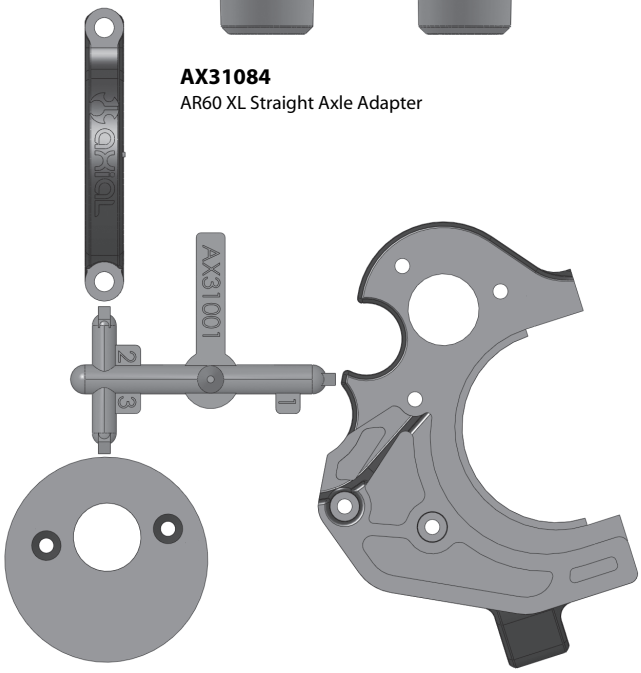

AX31001
XL 2 Speed Motor Mount

AX31803
Radio Box Seal

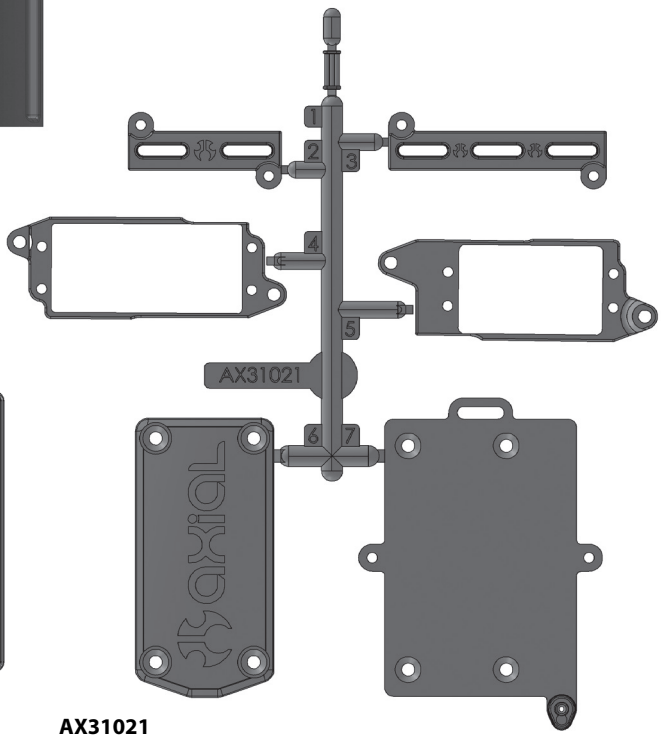

AX31021
MT Electronics Parts

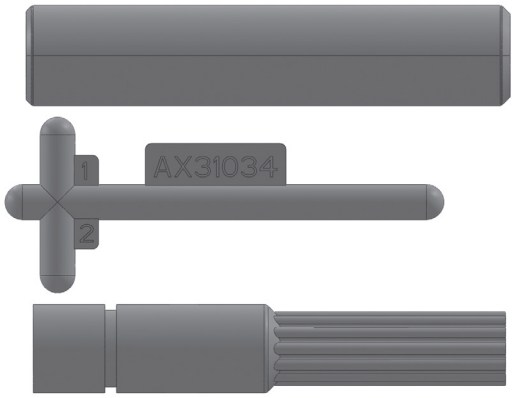

AX31034
WB XL Driveshaft

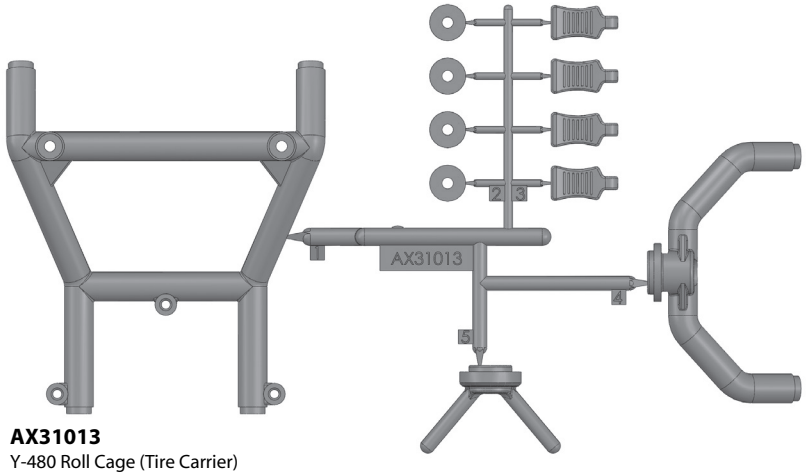

AX31013
Y-480 Roll Cage (Tire Carrier)

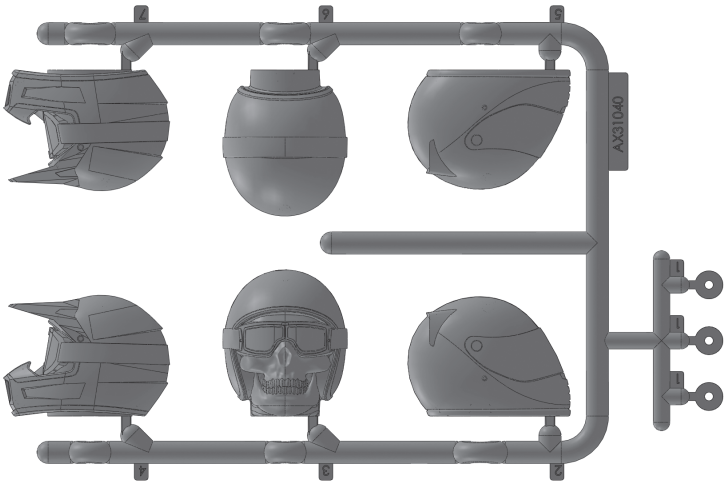

AX31040
Y-480 Helmet Set

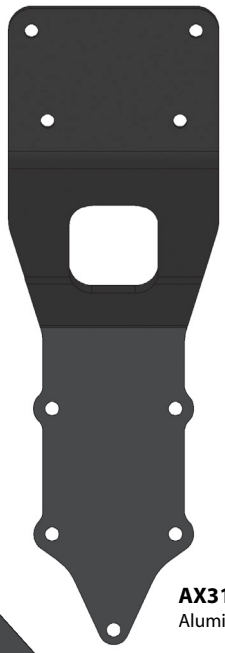

AX31237
Aluminum upper brace plate

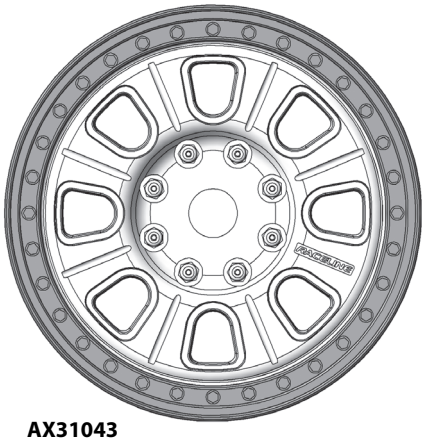

AX31043
3.8 Raceline Monster Wheels (Black)(2pcs)

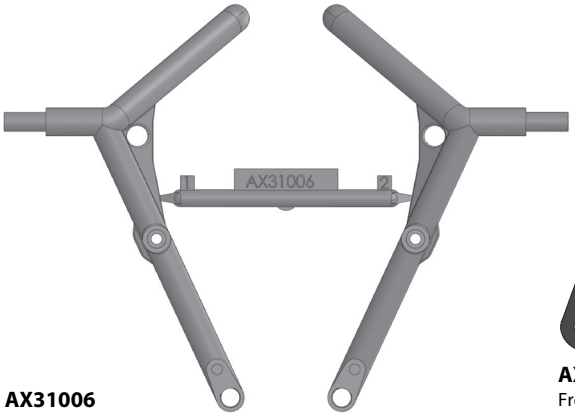

AX31006
Yeti™ XL Chassis Cage Components

AX31236
Front Aluminum Skid Plate

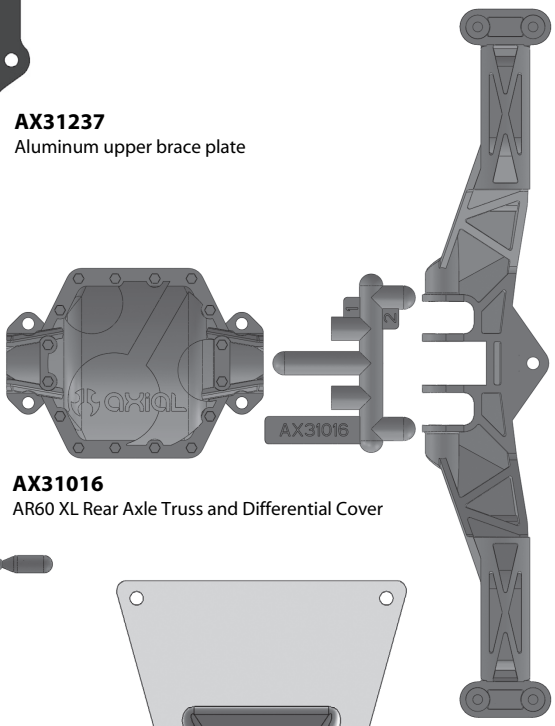

AX31016
AR60 XL Rear Axle Truss and Differential Cover

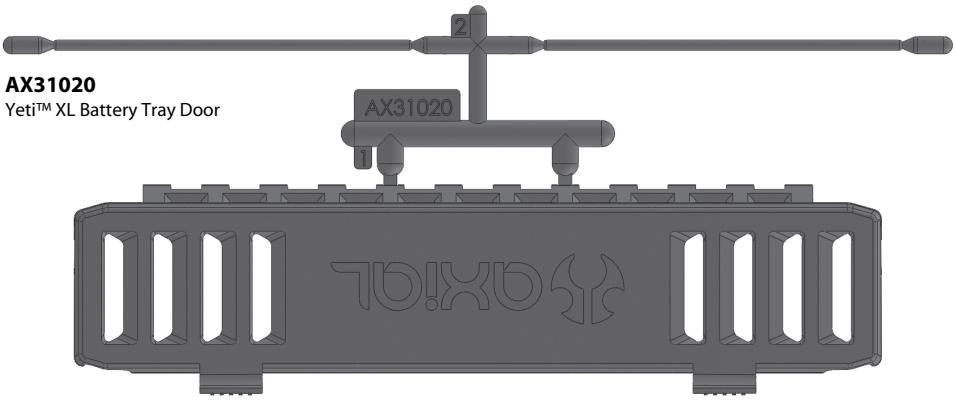

AX31020
Yeti™ XL Battery Tray Door

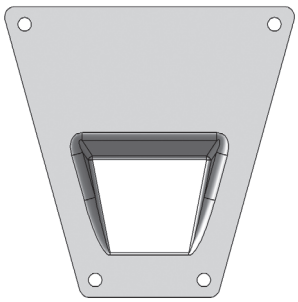

AX31088
Front Bumper Plate

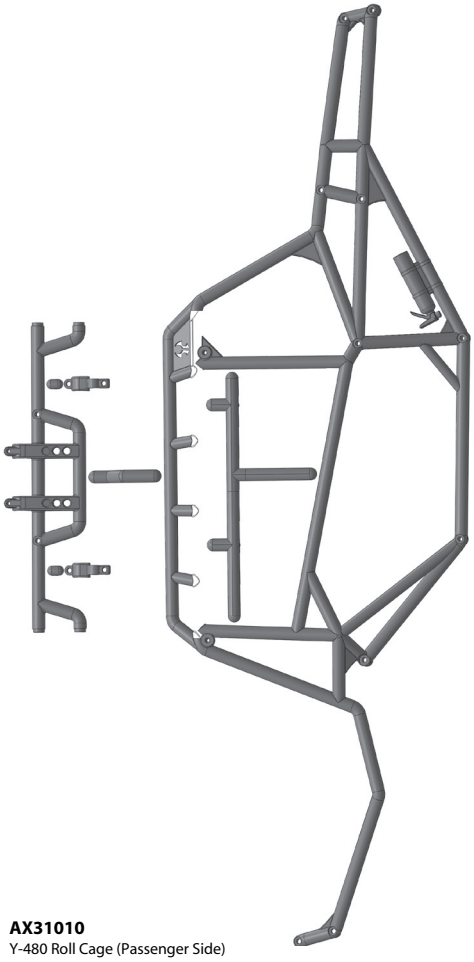

AX31010
Y-480 Roll Cage (Passenger Side)

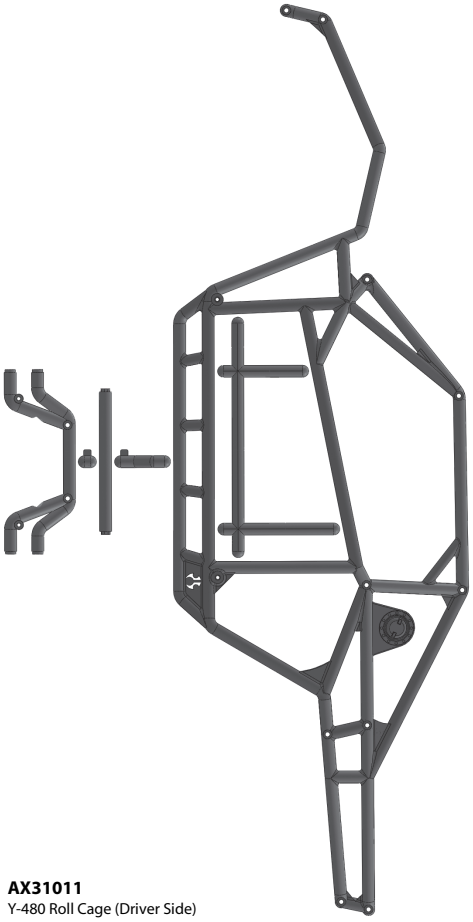

AX31011
Y-480 Roll Cage (Driver Side)

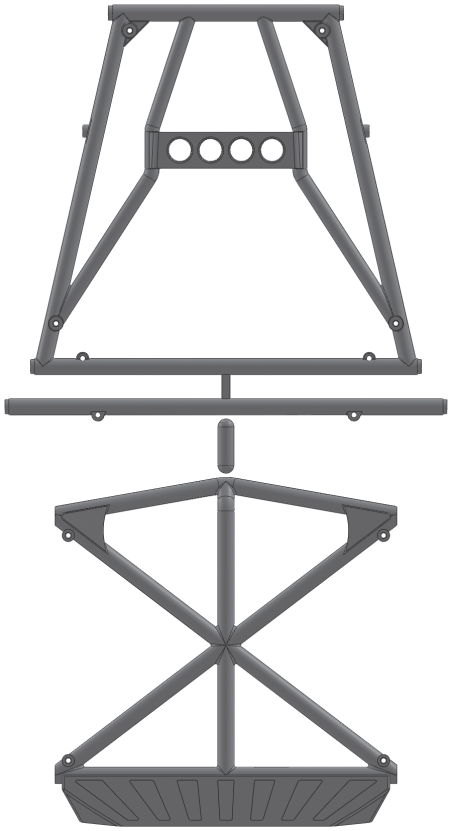

AX31012
Y-480 Roll Cage (Roof and Hood)

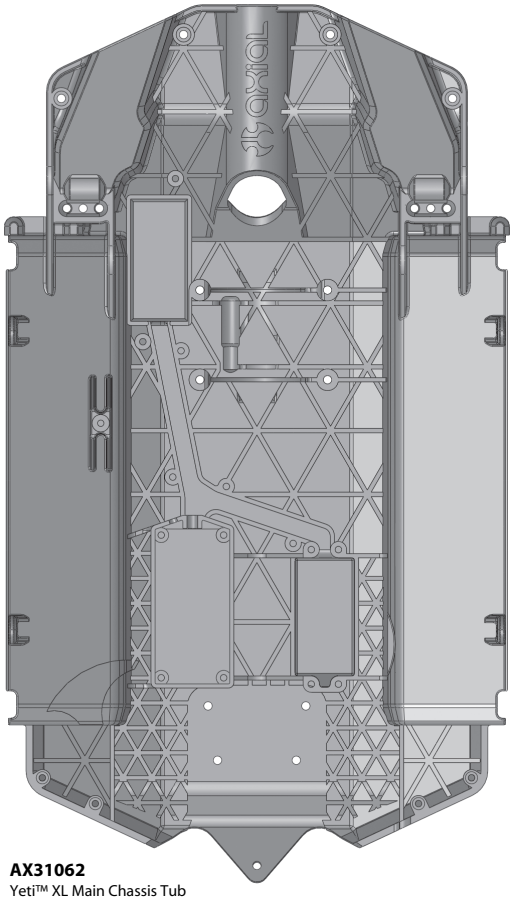

AX31062
Yeti™ XL Main Chassis Tub

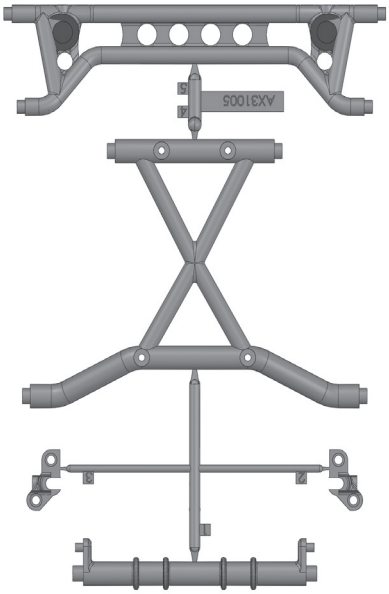

AX31005
Yeti™ XL Chassis Cross Members

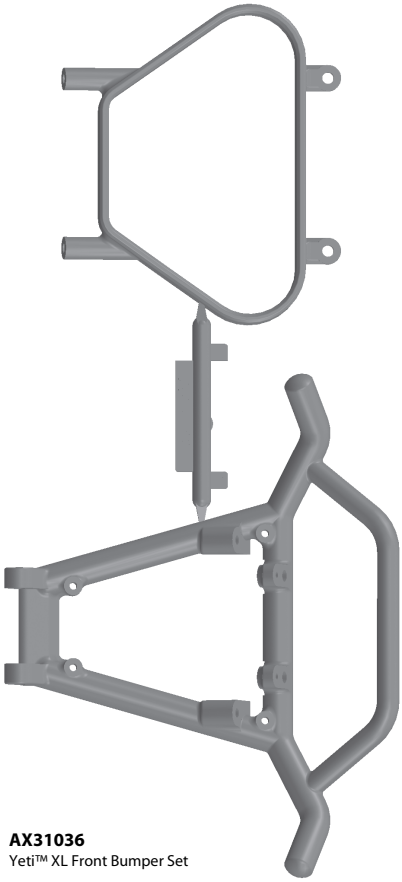

AX31036
Yeti™ XL Front Bumper Set

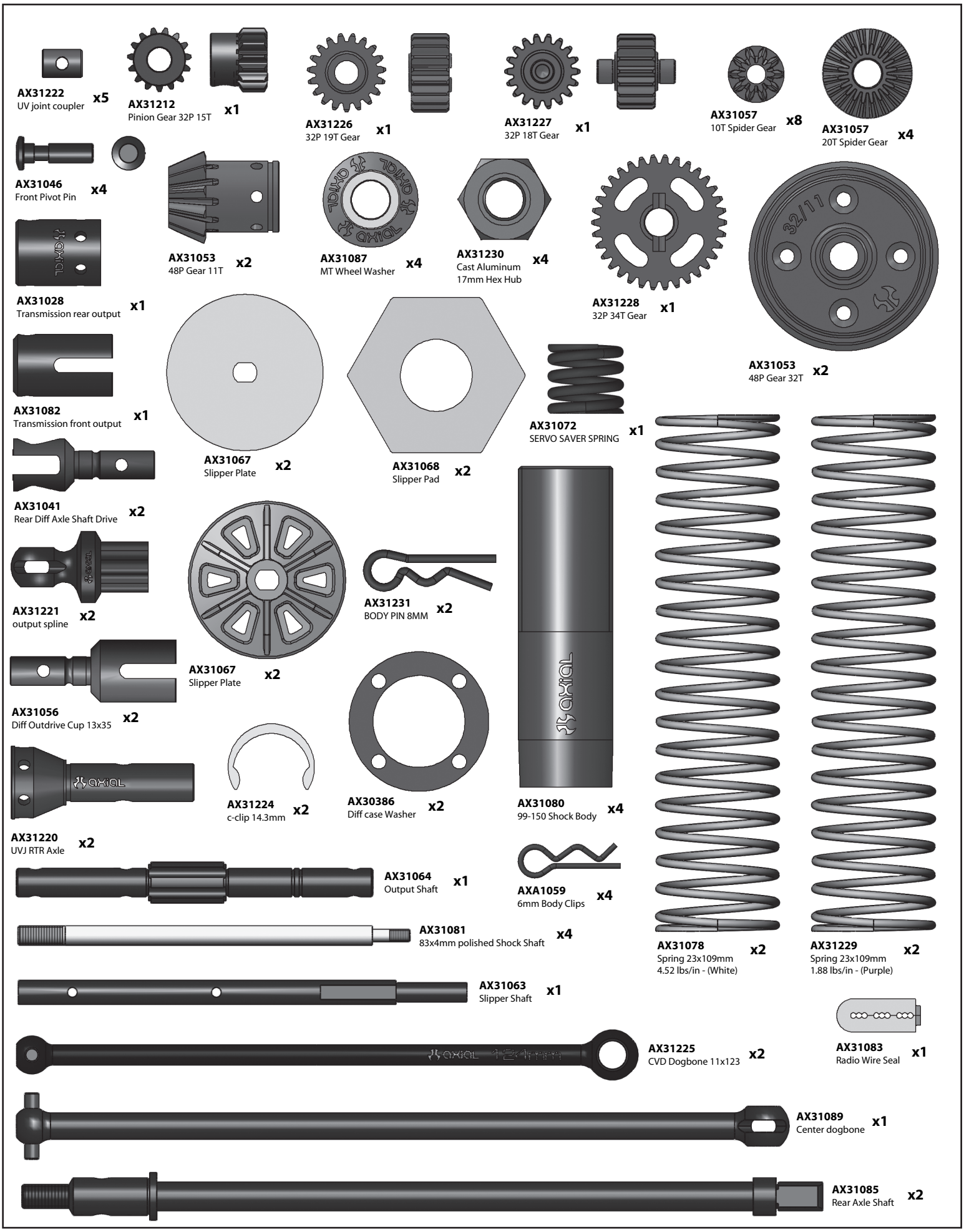
AX31222
UV joint coupler
x5
AX31212
Pinion Gear 32P 15T
x1
AX31226
32P 19T Gear
x1
AX31227
32P 18T Gear
x1
AX31057
10T Spider Gear
x8
AX31057
20T Spider Gear
x4
AX31046
Front Pivot Pin
x4
AX31053
48P Gear 11T
x2
AX31087
MT Wheel Washer
x4
AX31230
Cast Aluminum
17mm Hex Hub
x4
AX31028
Transmission rear output
x1
AX31228
32P 34T Gear
x1
AX31053
48P Gear 32T
x2
AX31082
Transmission front output
x1
AX31067
Slipper Plate
x2
AX31068
Slipper Pad
x2
AX31072
SERVO SAVER SPRING
x1
AX31041
Rear Diff Axle Shaft Drive
x2
AX31221
output spline
x2
AX31231
BODY PIN 8MM
x2
AX31067
Slipper Plate
x2
AX31056
Diff Outdrive Cup 13x35
x2
AX31224
c-clip 14.3mm
x2
AX30386
Diff case Washer
x2
AX31080
99-150 Shock Body
x4
AX31220
UVJ RTR Axle
x2
AX31064
Output Shaft
x1
AXA1059
6mm Body Clips
x4
AX31081
83x4mm polished Shock Shaft
x4
AX31078
Spring 23x109mm
4.52 lbs/in - (White)
x2
AX31229
Spring 23x109mm
1.88 lbs/in - (Purple)
x2
AX31063
Slipper Shaft
x1
AX31083
Radio Wire Seal
x1
AX31225
CVD Dogbone 11x123
x2
AX31089
Center dogbone
x1
AX31085
Rear Axle Shaft
x2

AXA1041	M2.5 Nylon Locking Hex Nut	x4
AXA1045	M4 Nylon Lock Nut	x1
AXA1052	M3 Thin Nylon Locking Hex Nut	x13
AXA1053	M3 Nylon Locking Hex Nut	x3
AX30163	Pin 2x10mm	x1
AX30165	Pin 2.5x12mm	x5
AX31222	Pin 2.5x14.8mm	x5
AX31076	P4 Oring	x8
AXA1144	O-Ring 6x9.5x1.9mm	x4
AX31075	O-Ring 15.5x1.5mm	x8
AXA1221	Bearing 6x10x3mm	x4
AXA1221	Bearing 5x11x4mm	x4
AXA1223	Bearing 6x12x4mm	x2
AXA1225	Bearing 8x16x5mm	x4
AXA1231	Bearing 10x16x5mm	x4
AXA1243	Bearing 15x21x4mm	x6
AXA1069	Washer 2.7x6.7x0.5 mm	x8
AXA1071	Washer 4x8x0.5mm	x2
AXA1072	Washer 3x8x0.5mm	x2
AXA1074	Washer 4x10x0.15mm	x8
AX31233	Washer 6x19x0.2mm	x4
AXA061	M2.6x4mm	x3
AXA066	M2.6x12mm	x3
AXA113	M3x6mm	x4
AXA114	M3x8mm	x5
AXA115	M3x10mm	x10
AXA116	M3x12mm	x8
AXA117	M3x15mm	x7
AXA118	M3x18mm	x12
AXA119	M3x20mm	x19
AXA121	M3x30mm	x2
AX31119	M3x35mm	x4
AXA124	M3x45mm	x2
AXA291	M4x4mm Set Screw (Black)	x3
AXA183	M3x6mm Set Screw	x4
AXA187	M3x6mm Set Screw	x4
AX31232	M4x16.5mm	x5
AX31045	M4x12mm	x3
AXA145	M3x10mm	x2
AXA146	M3x12mm	x7
AXA0147	M3x16mm	x2
AXA148	M3x18mm	x42
AXA149	M3x20mm	x12
AXA151	M3x30mm	x2
AXA474	M3x45mm	x1
AX31121	M4x12mm	x3
AXA089	M3x25mm	x4
AX31238	M3x50mm Cap head hex socket screw	x2
AXA414	M2.6x10mm	x2
AXA422	M2.6x6mm	x3
AXA423	M2.6x8mm	x4
AXA433	M3x6mm	x29
AXA435	M3x8mm	x4
AXA435	M3x10mm	x2
AXA437	M3x15mm	x6
AXA437	M3x20mm	x18
AXA1059	6mm Body Clip	x4

AX31238
AXA118
AXA118
AX31238
AXA117
AXA148
AXA148
AX31236
AXA1212
AXA146
AXA1212
AX31022
AX31022
AXA1212
AX31072
AXA148
AXA148
AX31022
AX31048
AXA146
AX31022
AX31024
AX31024
AX31033
AXA1212
AXA291
AXA119
AXA117
AX31073
AX31056
AX31024
AX31022
AXA1231
AXA117
AX31022
AXA116
AXA1144
AX31055
AX31025
AXA116
AX30165
AX31233
AX31057
AXA1074
AX31057
AX31024
AX31033
AX30386
AX30171
AX31024
AX31036
AX30165
AX31233
AX31057
AXA0423
AX31053
AXA119
AX31035
AXA1144
AXA1231
AXA116
AX31036
AX31231
AXA0286
AX31035
AX31231
AXA0286
AX31056
AXA116
AXA148
AX31088
AX31035
AXA0423
AXA118
AXA119
AXA118
AXA146
AXA119
AX31025
AXA145
AXA148
AXA146
AX31089
AX31052
AXA148
AX31024
AX31222
AX31220
AX31033
AXA117
AX31222
AX31018
AX31222
AX31024
AX31224
AX31225
AXA1243
AX31230
AXA183
AX31046
AX31232
AXA1225
AXA119
AXA1243
AX31053
AXA183
AXA061
AX31024
AXA117
AXA1243
AX31019
AX31033
AX31017
AXA119
AX31024
AX31046
AXA1052
AX31225
AX31222
AXA0124
AX31237
AX31222
AX31220
AX31052
AXA119
AX31018
AXA148
AXA119
AX31019
AX31024
AX31046
AX31051
AXA1052
AX31048
AXA183
AXA1243
AXA0124
AX31017
AXA1225
AX31046
AXA183
AX31230
AX31232
AX31050
AXA148
AX31024
axial

AXA148
AX31031
AX31024
AX31056
AX31053
AX31031
AXA1231
AXA1144
AX30165
AXA1074
AX31233
AX31057
AX31057
AX30171
AXA1052
AX30386
AX31015
AX31024
AX31057
AXA116
AX31233
AXA291
AX30165
AXA1144
AX31016
AXA116
AXA1231
AX31055
AX31232
AXA1225
AXA1053
AXA0422
AX31230
AX31085
AX31016
AXA145
AX31056
AX31024
AX31084
AXA115
AX31053
AXA0422
AXA1243
AX31014
AXA119
AXA119
AX31224
AXA1243
AX31024
AXA119
AXA115
AXA1052
AXA1053
AXA474
AX31024
AX31015
AX31014
AX31085
AXA1052
AXA118
AXA089
AX31044
AXA1225
AX31024
AX31015
AX31221
AX31222
AXA118
AX31222
AXA089
AXA146
AX31034
AXA115
AXA1053
AX31084
AXA115
AXA119
AX31232
AX31230
AXA1052
AX31014
AX31024
AX31015
AXA118
AXA1052
AX31015
AX31024
AXA118
AX31015
AXA1052
AX31024
AX31031
AX31024
AXA187
AXA148
AX31008
AXA121
AXA146
AXA146
AXA122
AXA122
AXA119
AX31004
AXA118
AX31005
AXA148
AX31008
AXA187
AXA118
AXA115
AXA148
AXA146
AXA146
AX31005
AX31006
AX31005
AXA148
AX31004
AXA118
AXA121
AXA122
AXA187
AXA148
AXA122
AX31008
AXA119
AX31005
AXA148
AXA148
AXA118
AX31007
AX31005
AX31008
AXA148
AXA115
AXA187

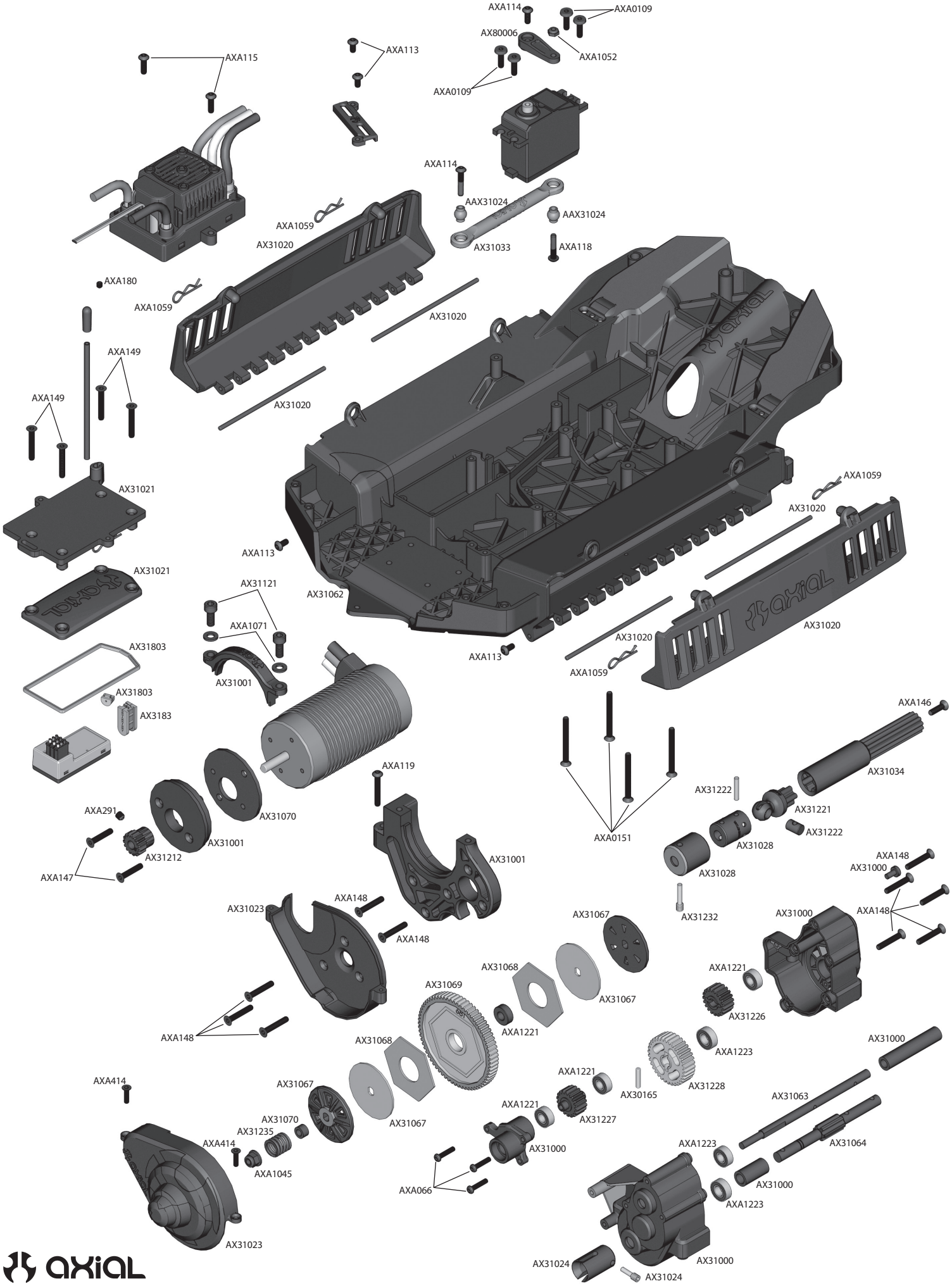
AXA114
AXA0109
AX80006
AXA1052
AXA113
AXA115
AXA0109
AXA114
AAX31024
AAX31024
AXA1059
AX31020
AX31033
AXA118
AXA180
AXA1059
AX31020
AXA149
AXA149
AX31020
AX31021
AXA1059
AX31020
AXA113
AX31021
AX31062
AX31121
AXA1071
AX31803
AX31001
AXA113
AX31020
AXA1059
AX31020
AX31803
AX3183
AXA146
AXA119
AX31034
AX31222
AXA291
AX31070
AX31221
AXA0151
AX31222
AX31001
AX31028
AX31212
AXA148
AXA147
AX31001
AX31028
AX31000
AXA148
AX31232
AX31023
AXA148
AXA148
AX31067
AX31000
AXA148
AX31068
AXA1221
AX31069
AX31067
AX31226
AXA1221
AXA148
AX31068
AXA1223
AX31000
AXA1221
AXA414
AX31067
AX30165
AX31228
AX31063
AXA1221
AX31227
AX31070
AX31067
AX31235
AXA414
AX31000
AXA1223
AX31064
AXA1045
AXA066
AX31000
AXA1223
AX31023
AX31024
AX31000
AX31024

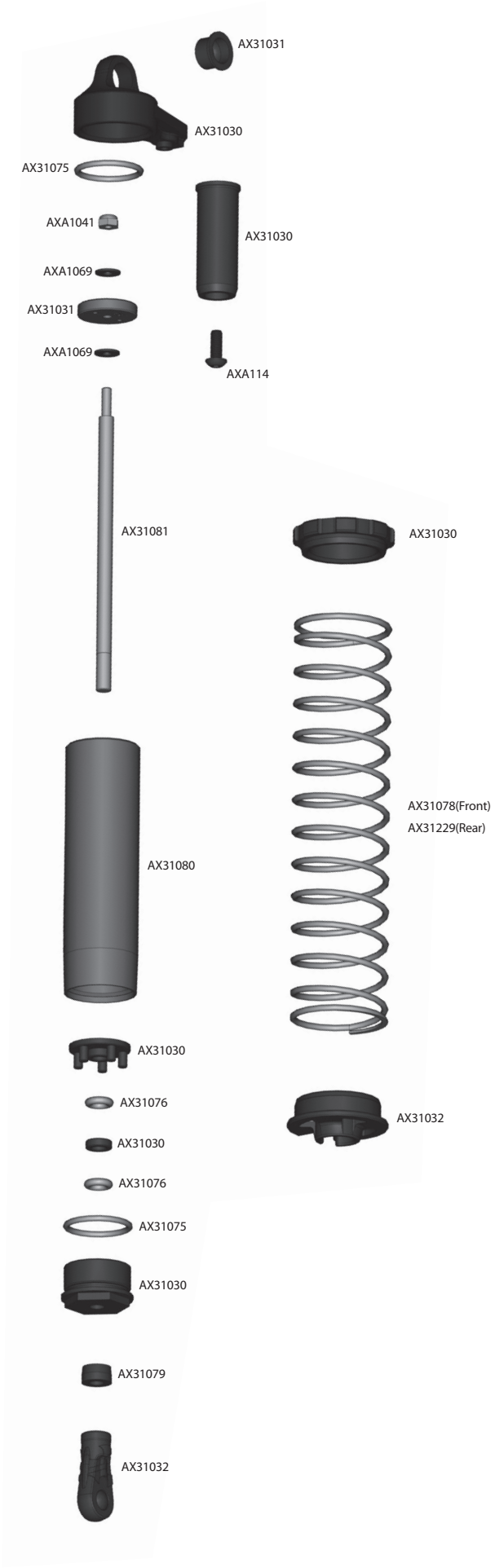
AX31031
AX31030
AX31075
AXA1041
AX31030
AXA1069
AX31031
AXA1069
AXA114
AX31081
AX31030
AX31078(Front)
AX31229(Rear)
AX31080
AX31030
AX31076
AX31032
AX31030
AX31076
AX31075
AX31030
AX31079
AX31032

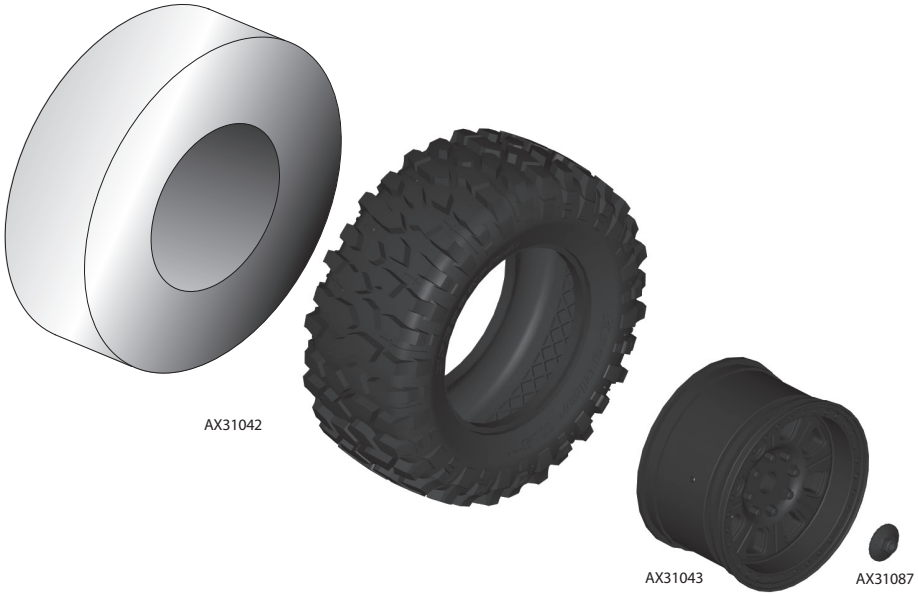
AX31042
AX31043
AX31087

AXA0439
AXA0439
AX31011
AXA433
AX31207
AX31013
AX31207
AXA434
AXA433
AX31010
AXA433
AX31039
AXA433
AX31010
AXA434
AX31010
AXA0439
AX31207
AXA433
AXA0439
AXA433
AXA0439
AX31012
AXA435
AX31040
AXA433
AXA433
AX31039
AX31040
AXA435
AXA433
AXA0439
AXA433
AXA0439
AXA0439
AXA0437
AXA0439
AXA0439
AX31012
AXA433
AX31038
AXA433
AX31011
AXA0439
AX31039
AXA0439
AXA0437
AXA0439
AX31010
AXA0439
AXA433
AX31012
AX31011

axial

Parts List

Part #	Description
AX24206	2.4GHz Radio System (2 Channel) (AX-3, AR-3)
AX30163	Pin 2.0x10mm (6pcs.)
AX30165	Pin 2.5x12mm (6pcs)
AX30171	Differential Cross Pin (2pcs)
AX30386	Differential Gasket 19.4x29.5x0.5mm (2pcs)
AX31000	XL 2 Speed Transmission Case
AX31001	XL 2 Speed Motor Mount
AX31004	Yeti™ XL Rear Shock Mount
AX31005	Yeti™ XL Chassis Cross Members
AX31006	Yeti™ XL Chassis Cage Components
AX31007	Yeti™ XL Chassis Rear Risers
AX31008	Yeti™ XL Rear Chassis Link Mounts (Upper and Lower)
AX31010	Y-480 Roll Cage (Passenger Side)
AX31011	Y-480 Roll Cage (Driver Side)
AX31012	Y-480 Roll Cage (Roof and Hood)
AX31013	Y-480 Roll Cage (Tire Carrier)
AX31014	Yeti™ XL Rear Links (Upper and Lower) (1pc)
AX31015	Yeti™ XL Rear Links Stiffeners (Upper and Lower (1pc)
AX31016	AR60 XL Rear Axle Truss and Differential Cover
AX31017	Yeti™ XL Steering Knuckle Set
AX31018	Yeti™ XL Lower Front Control Arm Set
AX31019	Yeti™ XL Steering Knuckle Carrier Set
AX31020	Yeti™ XL Battery Tray Door
AX31021	Yeti™ XL Electronics Box Parts
AX31022	Steering Bellcrank
AX31023	Yeti™ XL Transmission Spur Gear Cover
AX31024	Rod End Ball Set (6.8x8x3mm)
AX31025	Yeti™ XL Front Shock Tower
AX31030	Big Bore Shock Cap Parts (16mm)
AX31031	Big Bore Shock Parts and Piston (16mm)
AX31032	Big Bore Shock Parts and Rod Ends (16mm)
AX31033	Yeti™ XL Front Links (Upper Control and Steering)
AX31034	WB XL Driveshaft
AX31035	Yeti™ XL Body Mount Set
AX31036	Yeti™ XL Front Bumper Set
AX31038	Y-480 Front Interior Set - .040" (Clear)
AX31039	Y-480 1/8th Scale Body - .040" (Clear)
AX31040	Y-480 Helmet Set
AX31041	Differential Outdrive 11x30mm
AX31042	3.8 BFGoodrich Krawler T/A Tires - R35 Compound (2pcs)
AX31043	3.8 Raceline Monster Wheels (Black) (2pcs)
AX31044	AR60 XL Rear Axle Housing
AX31045	Screw Shaft M4x2.5x13mm (10pcs)
AX31046	Steering King Pin 14.7x4mm (Ti-Nitride Coated) (2pcs)
AX31048	Yeti™ XL Front Clip and Skid Plate
AX31050	Hinge Pin 4x85mm (Threaded) (Black) (6pcs)
AX31051	M4 Nylon Locking Hex Nut (Black) (10pcs)
AX31052	Yeti™ XL Front Bulkhead
AX31053	Machined Bevel Gear Set - 32T/11T
AX31055	Differential Case
AX31056	Differential Output Shaft (2pcs)
AX31057	Differential Gear Set - 20T/10T
AX31059	Slipper Plate Washer 33x1mm (2pcs)
AX31062	Yeti™ XL Main Chassis Tub
AX31063	Slipper Drive Gear Shaft 5x92mm
AX31064	Outdrive Shaft
AX31067	Slipper Plate (2pcs)
AX31068	Slipper Pad 32.8x15.2x1mm (2pcs)
AX31069	Metal Spur Gear 32P 68T
AX31070	Motor Plate
AX31072	Servo Saver Spring 2.2x11.8mm 230.51 lbs/in
AX31073	M3x4x15mm Hex Socket Button Head Shoulder Screw - Black (6pcs)
AX31075	O-Ring 15.5x1.5mm (S16) (6pcs)
AX31076	O-Ring 3.8x1.9mm (P4) (10pcs)
AX31078	Spring 23x109mm 4.52 lbs/in - (White) (2pcs)
AX31079	Rubber Bump Stop 4x8x4mm (6pcs)
AX31080	Big Bore Aluminum Shock Body 99-150mm (2pcs)
AX31081	Shock Shaft 4x83mm (2pcs)
AX31082	Transmission Output (Front and Rear)
AX31083	Radio Box Seals
AX31084	AR60 XL Straight Axle Adapter
AX31085	Rear Axle 10x169.5mm (2pcs)
AX31087	M5 Locking Wheel Washer 8x20x3mm (4pcs)
AX31088	Yeti™ XL Front Bumper Skid Plate Aluminum

Part #	Description
AX31089	Center Universal Driveline 11x155mm
AX31091	AE-4 Vanguard XL ESC
AX31092	Vanguard XL 2200KV Brushless Motor
AX31119	M3x35mm Hex Socket Button Head (Black) (10pcs)
AX31120	M3x10mm Hex Socket Flat Head (Black) (10pcs)
AX31121	M4x12mm Cap Head (Black) (10pcs)
AX31129	2-Speed Hi/Lo Transmission Bottom Shaft (5x75mm)
AX31194	M2.6x4mm Hex Socket Button Head (Black) (10pcs)
AX31195	M2.6x12mm Hex Socket Button Head (Black) (10pcs)
AX31196	Washer 4x10x0.15mm (10pcs)
AX31197	O-Ring 9.5x1.9mm (10pcs)
AX31198	Bearing 6x10x3mm (2pcs)
AX31200	Bearing 6x12x4mm (2pcs)
AX31201	Bearing 10x16x4mm (2pcs)
AX31202	M3x45mm Hex Socket Button Head (Black) (6pcs)
AX31204	M3x6mm Set Screw (Black) (10pcs)
AX31205	M2.6x8mm Hex Socket Tapping Button Head (Black) (10pcs)
AX31206	M3x45mm Hex Socket Flat Head (Black) (6pcs)
AX31207	Y-480 Rear Interior and Number Plates Set - .040" (Clear)
AX31212	Pinion Gear 32P 15T - Steel (5mm Motor Shaft)
AX31220	Universal Joint Axle Shaft 15.5x38mm (2pcs)
AX31221	WB XL Driveshaft Coupler
AX31222	Universal Joint Rebuild Kit (2pcs)
AX31223	Pin 2.5x14.5mm (6pcs)
AX31224	C-Clip 14.3mm (10pcs)
AX31225	Universal Joint Dogbone 123mm (2pcs)
AX31226	32P 19T Transmission Gear
AX31227	32P 18T Transmission Gear
AX31228	32P 34T Transmission Gear
AX31230	17mm Aluminum Hub - Black (4pcs)
AX31231	8mm Body Clips (Black) (10pcs)
AX31232	Screw Shaft M4x2.5x16.5mm (6pcs)
AX31233	Washer 6x19x0.2mm (Black) (6pcs)
AX31234	Battery Tray Foam Pad Set
AX31235	Slipper Spring 10x7mm 228lbs/in (Black) (2pcs)
AX31236	Front Aluminum Skid Plate
AX31237	Front Aluminum Upper Brace
AX31238	M3x50mm Cap Head (Black) (6pcs)
AX80006	Servo Set
AXA0109	M3x10mm Oversized Flat Hex Socket (Black) (10pcs)
AXA0113	M3x6mm Hex Socket Button Head (Black) (10pcs)
AXA0147	M3x16mm Hex Socket Flat Head (Black) (10pcs)
AXA0151	M3x30mm Hex Socket Flat Head (Black) (10pcs)
AXA0187	M3x20mm Set Screw (Black) (10pcs)
AXA0414	M2.6x10mm Hex Socket Tapping Flat Head (Black) (10pcs)
AXA0422	M2.6x6mm Hex Socket Tapping Button Head (Black) (10pcs)
AXA0437	M3x15mm Hex Socket Tapping Button Head (Black) (10pcs)
AXA0439	M3x20mm Hex Socket Tapping Button Head (Black) (10pcs)
AXA089	M3x25mm Cap Head (Black) (10pcs)
AXA1041	M2.5 Nylon Locking Hex Nut - Silver (10pcs)
AXA1045	M4 Nylon Lock Nut (Black) (10pcs)
AXA1052	M3 Thin Nylon Locking Hex Nut (Black)
AXA1053	M3 Nylon Locking Hex Nut (Black) (10pcs)
AXA1059	6mm Body clip (Black) (10pcs)
AXA1069	Washer 2.7x6.7x0.5 (10pcs)
AXA1071	Washer 4x8x0.5mm (10pcs)
AXA1072	Washer 3x8x0.5mm
AXA114	M3x8mm Hex Socket Button Head (Black) (10pcs)
AXA115	M3x10mm Hex Socket Button Head (Black) (10pcs)
AXA116	M3x12mm Hex Socket Button Head - Black (10pcs)
AXA117	M3x15mm Hex Socket Button Head (Black) (10pcs)
AXA118	M3x18mm Hex Socket Button Head - Black (10pcs)
AXA119	M3x20mm Hex Socket Button Head (Black) (10pcs)
AXA121	M3x30mm Hex Socket Button Head (Black) (10pcs)
AXA1221	Bearing 5x11x4mm (2pcs)
AXA1225	Bearing 8x16x5mm (2pcs)
AXA1243	Bearing 15x21x4mm (2pcs)
AXA146	M3x12mm Hex Socket Flat Head - Black (10pcs)
AXA148	M3x18mm Hex Socket Flat Head (Black) (10pcs)
AXA149	M3x20mm Hex Socket Flat Head - Black (10pcs)
AXA291	M4x4mm Set Screw (Black) (6pcs.)
AXA433	M3x6mm Hex Socket Tapping Button Head - Black (10pcs)
AXA434	M3x8mm Hex Socket Tapping Button Head (Black) (10pcs)
AXA435	M3x10mm Hex Socket Tapping Button Head (Black) (10pcs)

EXPLORE

facebook.com/axialinc | twitter.com/axialrc | youtube.com/axialvideos | flickr.com/axialrc

www.axialracing.com

AX90032-1001

BFGoodrich® Tires and KRAWLER™ T/A® Trademarks are used under License from Michelin.